Beach Front Wooden Swing Set

Model # 1605022B

Owner's Manual & Assembly Instructions

MANUFACTURED BY:
Backyard Discovery
3305 Airport Drive
Pittsburg, KS 66762
800-856-4445

GOCONFIGURE
Putting it all together for you

INSTALLATION SERVICES AVAILABLE!*

Need a helping hand?

Let our team of professionals handle the installation for you!

GOCONFIGURE
888-888-5424

**Installation services are only available to U.S. customers.*

average 2 person assembly time

assembly time may vary based on skill level

Before you begin

FOR QUICK & EASY ASSEMBLY

FIND 3D INSTRUCTIONS FOR THIS PRODUCT IN

BILT.

DOWNLOAD THE **FREE** APP

GET IT ON Google Play

Download on the App Store

For the most up to date assembly manual,
to register your set, or to order replacement parts please visit
www.backyarddiscovery.com

SAVE THIS ASSEMBLY MANUAL FOR FUTURE REFERENCE IN THE EVENT THAT YOU NEED TO ORDER REPLACEMENT PARTS.

Para obtener instrucciones en español, visite www.backyarddiscovery.com

Made in China | INS-1605022B-BEACH FRONT-ENG 05/14/20

GOCONFIGURE
Putting it all together for you

INSTALLATION SERVICES AVAILABLE!*

Need a helping hand?

Let our team of professionals handle the installation for you!

GOCONFIGURE
888-888-5424

Installation services are only available to U.S. customers.

With Go Configure, we bring you 18 years of experience right to your doorstep. We service a wide array of indoor and outdoor recreation products that most consumers don't have the time or ability to deliver & install themselves.

We do the heavy lifting, so you don't have to!

- 18+ Years of Experience Servicing Big Box Retailers and Direct Consumers
- Highly Skilled, Specialized, Courteous, Professional Service Technicians
- Over 140,000 Installations Annually
- White Glove Service
- Satisfaction Guarantee
- Flexible Appointments, including weekends
- Coverage across the nation

Visit www.goconfigure.com for more info!

Installation services are only available to U.S. customers.

STOP

MISSING A PART?
CALL US BEFORE GOING BACK TO THE STORE

The store where you made your purchase does not stock parts for this item. If you have assembly questions or you are missing or have damaged parts, please call

1-800-856-4445

you can also visit www.backyarddiscovery.com

or e-mail customerservice@backyarddiscovery.com

Please have the following information ready when you make your call:

- Model Number of the product located on the front of the assembly manual
- Description of the part from the parts list

- Read entire assembly manual, paying special attention to the important tips and safety information.
- Ensure there are no missing pieces by first separating and identifying all parts.
- Make sure to check packing material for small parts that may have fallen out during shipment.
- Structures are not intended for public use. The Company does not warranty any of its residential structures subjected to commercial use such as: Daycare, Preschool, Nursery School, Recreational Park, or any similar Commercial Application.
- This manual contains helpful information concerning assembly preparation, installation procedure and required maintenance.
- Always keep safety in mind as your structure is being built.
- Keep these instructions for future reference.

Limited Warranty

Please read entire booklet completely before beginning the assembly process

Please retain these instructions and your receipt for future reference. Keep them in a safe place where you can refer to them as needed. In order to provide you with the most efficient service, it is required that you provide us with the part numbers when ordering parts.

For Your Records:

Please take time and fill out the information below. This information will be needed for warranty issues.

Where Purchased: _____
Date of Purchase: _____
Installation Date: _____
Installed by: _____
Tracking Number: _____

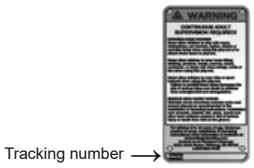

Vertical ID Plate

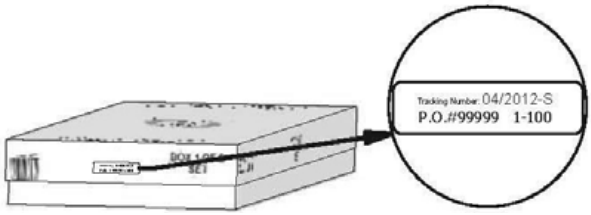

Tracking Number Reference Label

Tracking ID number on the carton and on the bottom of the vertical ID plate are included for tracking purposes associated with warranty claims.

This Limited Warranty by Backyard Discovery applies to products manufactured under the Backyard Discovery brand or its other brands including but not limited to Backyard Botanical, Adventure Playsets, and Leisure Time Products.

Backyard Discovery warrants that this product is free from defect in materials and workmanship for a period of one (1) year from the original date of purchase. This one (1) year warranty covers all parts including wood, hardware, and accessories. All wood carries a five (5) year pro-rated warranty against rot and decay. Refer to the schedule below for charges associated with replacement of parts under this Limited Warranty. In addition, Backyard Discovery will replace any parts within the first 30 days from date of purchase found to be missing from or damaged in the original packaging.

This warranty applies to the original owner and registrant and is non-transferable. Regular maintenance is required to assure maximum life and performance of this product. Failure by the owner to maintain the product according to the maintenance requirements may void this warranty. Maintenance guidelines are provided in the Owner's Manual.

This Limited Warranty does not cover:

- Labor for any inspection
- Labor for replacement of any defective item(s)
- Incidental or consequential damages
- Cosmetic defects which do not affect performance or integrity of a part or the entire product
- Vandalism, improper use, failure due to loading or use beyond the capacities stated in the applicable Assembly Manual.
- Acts of nature including but not limited to wind, storms, hail, floods, excessive water exposure
- Improper installation including but not limited to installation on uneven, unlevel, or soft ground
- Minor twisting, warping, checking, or any other natural occurring properties of wood that do not affect performance or integrity

Backyard Discovery products have been designed for safety and quality. Any modifications made to the original product could damage the structural integrity of the unit leading to failure and possible injury. Modification voids any and all warranties and Backyard Discovery assumes no liability for any modified products or consequences resulting from failure of a modified product.

This product is warranted for RESIDENTIAL USE ONLY. Under no circumstance should a Backyard Discovery product be used in public settings. Such use may lead to product failure and potential injury. Any and all public use will void this warranty. Backyard Discovery disclaims all other representations and warranties of any kind, express or implied.

Pro Rated Part Replacement Schedule

Product Age	Customer Pays
All Parts	
0-30 days from date of purchase	$0 and free shipping
31 days to 1 year	$0 + S&H
Wood Rot and Decay Only	
1 year	$0 and free shipping
2 year	20% + S&H
3 year	40% + S&H
4 year	60% + S&H
5 year	80% + S&H
Over 5 years	100% + S&H

NOTE:

Your Children's Safety Is Our #1 Concern!

Observe the following statements and warnings to reduce the likelihood of serious or fatal injury. Please review these safety rules regularly with your children.

WARNING:
BURN HAZARD

- Pay special attention to plastic and metal surfaces as they may be hot enough to cause burns.
- Always check the temperature of the product before letting your children play on it.
- Remember that the product may cause burns if left in direct sunlight.
- Always be aware of the sun and weather conditions, and do not assume that the equipment is safe because the air temperature is not very high.

- Children **MUST NOT** use this playcenter until unit has been completely assembled and inspected by an adult to ensure set has been properly installed and anchored.
- Equipment is recommended for use by children 3 to 10 years of age.
- This Playcenter is designed for a specific number of occupants whose combined weight should not exceed the designated weight on the elevatedfloor or the swing area. The total unit capacity is outlined in the Basic Setup Dimensions section of instruction manual. The maximum fall height and recommended play area is also available in the Basic Setup Dimensions section of the manual.
- On-site, continuous adult supervision is **REQUIRED. MOST SERIOUS INJURIES AND DEATHS ON PLAYGROUND EQUIPMENT HAVE OCCURRED WHILE CHILDREN WERE UNSUPERVISED!**
- **DO NOT** allow children to walk close to, in front of, behind, or between moving swings or other moving playground equipment.
- **DO NOT** let children stand on swings.
- Children should **NOT** twist the chains and ropes and should not loop them over the top support bar, this could reduce the strength of the chain or rope.
- **DO NOT** let children push empty seats. The seat could hit them and cause serious injury.
- Instruct and teach children to sit in the center of the swings with their full weight on the seats.
- **DO NOT** allow children to use the equipment in a manner other than intended.
- Instruct children **NOT** to get off equipment while it is in motion.
- Instruct children to **ALWAYS** go down slides feetfirst. Never slideheadfirst.
- Instruct children to **LOOK** before they slide to make sure no one is at the bottom.
- **DO NOT** allow children to run up a slide, as this increases their chances of falling.
- **DRESS CHILDREN APPROPRIATELY.** (Examples would include wearing well-fitting shoes and the avoidance of ponchos, scarfs, and other loose-fitting clothing that is potentially hazardous while using equipment).
- **DO NOT** allow children to climb when the equipment is wet.
- Children should **NEVER** jump from a fort deck. They should always use the ladder, ramp or slide.
- Children should **NEVER** be allowed to crawl or walk across the top of monkey bars.
- **DO NOT** allow children to crawl on top of a fort roof.
- Verify that any suspended climbing ropes, chain, or cable are secured at both ends and that they cannot be looped back on themselves as to create an entanglement hazard.
- **DO NOT** let children attach items to the playground equipment that are not specifically designed for use with the equipment. Items such as, but not limited to, jump ropes, clothesline, pet leashes, cables and chain can cause a strangulation hazard.
- Children should **NEVER** wrap their legs around swing chain.
- **DO NOT** allow children to slide down the swing chain.
- Instruct children to remove their bike or other sports helmet before playing on playground equipment.
- **NEVER** add extra length to chain or rope. The chains or ropes provided are the maximum length designed for the swinging element(s).

Modifications

- Modifications made by the consumer to the original activity toy shall be carried out according to the instructions of the manufacturer. In particular, instructions shall be provided with kit/accessory about the installation of rope/nets concerning the minimum diameter, the need for fixation at both ends, overall length, and positioning in relation to other structures.

Positioning Your Playcenter

- The playcenter is designed to be installed on a level surface by an adult with an adult helper. Place in a flat area of your yard to minimize ground preparation.
- Choose a level location for the equipment. This can reduce the likelihood of the play set tipping over and loose-fill surfacing material washing away during heavy rains.
- Place the equipment not less than 6'-7" (2.0 m) from any structure or obstruction such as a fence, garage, house, overhanging branches, laundry lines, or electrical wires.
- Provide enough room so that the children can use the equipment safely. For example, for structures with multiple play activities, a slide should not exit in front of a swing.
- It is a good idea to place your playcenter in an area that is convenient for adults to watch children at play.
- Create a site free of obstacles that could cause injuries – such as low overhanging tree branches, overhead wires, tree stumps and/or roots, large rocks, bricks and concrete. Additional suggestions in the Suggested Playground Surfacing Section.
- Do not build your playset on top of surfacing material.
- Locate bare metal platforms and slides out of direct sunlight to reduce the likelihood of serious burns. A slide that faces north will receive the least direct sunlight.
- Separate active and quiet activities from each other. For example, locate sandboxes away from swings or use a guardrail or barrier to separate the sandbox from the movement of the swings.

Suggested Playground Surfacing

- Do not install home playground equipment over concrete, asphalt, packed earth, grass, carpet, or any other hard surface. A fall onto a hard surface can result in serious injury to the equipment user.
- Do not install loose fill surfacing over hard surfaces such as concrete or asphalt.
- Shredded bark mulch, wood chips, fine sand and fine gravel, are added as shock absorbing materials after assembly. If used properly these materials can absorb some of the impact of a child's fall.
- All surface material should extend a minimum of 6'-7" (2.0 m) feet in all directions around the play area.
- Do not apply playground surfacing until after the unit is completely constructed. Playset should not be built on top of surfacing.
- Use containment, such as digging out around the perimeter and/or lining the perimeter with landscape edging.
- Installations of rubber tiles or poured-in-place surfaces (other than loose-fill materials) generally require a professional and are not "do-it-yourself" projects.
- Shall use Playground Surfacing Materials (other than loose-fill material) which comply with the safety standard ASTM F1292 Standard Specification of Impact Attenuation of Surfacing Materials within the Use Zone of Playground Equipment.
- Anchors shall be placed as instructed to reduce tipping hazards.

The following chart explains the fall height in feet from which a life threatening head injury would not be expected

Critical Heights in feet (m) of Tested Materials

Material	Uncompressed Depth			Compressed Depth
	6" (152mm)	9" (228mm)	12" (304mm)	to 9" (228mm)
Wood Chips	7' (2.13m)	10-12' (3.0-3.6m)	11' (3.35m)	10' (3.05m)
Double-Shredded Bark Mulch	6' (1.83m)	10-12' (3.0-3.6m)	11' (3.35m)	7' (2.13m)
Engineered Wood Fibers	6' (1.83m)	7' (2.13m)	>12' (3.66m)	6' (1.83m)
Fine Sand	5' (1.52m)	5' (1.52m)	9' (2.74m)	5' (1.52m)
Coarse Sand	5' (1.52m)	5' (1.52m)	6' (1.83m)	4' (1.22m)
Fine Gravel	5' (1.52m)	7' (2.13m)	10' (3.05m)	6' (1.83m)
Medium Gravel	5' (1.52m)	5' (1.52m)	6' (1.83m)	5' (1.52m)
Shredded Tires*	10-12' (3.0-3.6m)	N/A	N/A	N/A

*This data is from tests conducted by independent testing laboratories on a 6-inch depth of uncompressed shredded tire samples produced by four manufacturers. The tests reported critical heights, which varied from 10 feet to greater than 12 feet. It is recommended that persons seeking to install shredded tires as a protective surface request test data from the supplier showing the critical height of the material when it was tested in accordance with ASTM F1292.

APPENDIX A

The following information is from the United States Consumer Product Safety Commission's Information Sheet for playground surfacing material; also see the following website for additional information: www.cpsc.gov

X3. SECTION 4 OF THE CONSUMER PRODUCT SAFETY COMMISSION'S OUTDOOR HOME PLAYGROUND SAFETY HANDBOOK[9]

X3.1 Select Protective Surfacing—One of the most important things you can do to reduce the likelihood of serious head injuries is to install shock-absorbing protective surfacing under and around your play equipment. The protective surfacing should be applied to a depth that is suitable for the equipment height in accordance with ASTM Specification F 1292. There are different types of surfacing to choose from; whichever product you select, follow these guidelines:

X3.1.1 Loose-Fill Materials:

X3.1.1.1 Maintain a minimum depth of 9 inches of loose-fill materials such as wood mulch/chips, engineered wood fiber (EWF), or shredded/recycled rubber mulch for equipment up to 8 feet high; and 9 inches of sand or pea gravel for equipment up to 5 feet high. NOTE: An initial fill level of 12 inches will compress to about a 9-inch depth of surfacing overtime. The surfacing will also compact, displace, and settle, and should be periodically refilled to maintain at least a 9-inch depth.

X3.1.2 Use a minimum of 6 inches of protective surfacing for play equipment less than 4 feet in height. If maintained properly, this should be adequate. (At depths less than 6 inches, the protective material is too easily displaced or compacted.)

NOTE: Do not install home playground equipment over concrete, asphalt, or any other hard surface. A fall onto a hard surface can result in serious injury to the equipment user. Grass and dirt are not considered protective surfacing because wear and environmental factors can reduce their shock absorbing effectiveness. Carpeting and thin mats are generally not adequate protective surfacing. Ground level equipment such as a sandbox, activity wall, playhouse or other equipment that has no elevated play surface – does not need any protective surfacing.

X3.1.3 Use containment, such as digging out around the perimeter and/or lining the perimeter with landscape edging. Don't forget to account for water drainage.

X3.1.3.1 Check and maintain the depth of the loose-fill surfacing material. To maintain the right amount of loose-fill materials, mark the correct level on play equipment support posts. That way you can easily see when to replenish and/or redistribute the surfacing.

X3.1.3.2 Do not install loose-fill surfacing over hard surfaces such as concrete or asphalt.

X3.1.4 Poured-In-Place Surfaces or Pre-Manufactured Rubber Tiles — You may be interested in using surfacing other than loose-fill materials – like rubber tiles or poured-in-place surfaces.

X3.1.4.1 Installations of these surfaces generally require a professional and are not "do-it-yourself" projects.

X3.1.4.2 Review surface specification before purchasing this type of surfacing. Ask the installer/manufacturer for a report showing that the product has been tested to the following safety standard: ASTM F 1292 Standard Specification for Impact Attenuation of Surfacing Materials within the Use Zone of Playground Equipment. This report should show the specific height for which the surface is intended to protect against serious head injury. This height should be equal to or greater than the fall height – vertical distance between a designated play surface (elevated surface for standing, sitting, or climbing) and the protective surfacing below – of your play equipment

X3.1.4.3 Check the protective surfacing frequently for wear.

X3.1.5 Placement — Proper placement and maintenance of protective surfacing is essential. Be sure to:

X3.1.5.1 Extend surfacing at least 6 feet from the equipment in all directions.

X3.1.5.2 For to-fro swings, extend protective surfacing in front of and behind the swing to a distance equal to twice the height of the top bar from which the swing is suspended.

[9]This information has been extracted from the CPSC publications "Playground Surfacing — Technical Information Guide" and "Handbook for Public Playground Safety." Copies of these reports can be obtained by sending a postcard to the: Office of Public Affairs, U.S. Consumer Product Safety Commission, Washington, D.C., 20207 or call the toll-free hotline: 1-800-638-2772.

The American Society for Testing and Materials takes no position respecting the validity of any parent right asserted in connection with any item mentioned in this standard. Users of this standard are expressly advised that determination of the validity of any such parent rights, and the risk of infringement of such rights, are entirely their own responsibility.

The standard is subject to revision at any time by the responsible technical committee and must be reviewed every five years and if not revised, either approved or withdrawn. Your comments are invited either for revision of this standard or for additional standards and should be addressed to ASTM Headquarters. Your comments will receive careful consideration at a meeting of the responsible technical committee, which you may attend. If you feel that your comments have not received a fair hearing you should make your views known to the ASTM Committee on Standards. 100 Barr Harbor Drive, West Conshohocken, PA 19428.

Instructions for Proper Maintenance

IT IS IMPORTANT TO CHECK AND TIGHTEN ALL HARDWARE AT THE BEGINNING AND DURING THE SEASON AS THEY MAY LOOSEN DUE TO WOOD EXPANSION AND CONTRACTION.

At the beginning of each play season

- Tighten all hardware.
- Lubricate all metallic moving parts per manufacturer's instructions.
- Check all protective coverings on bolts, pipes, edges, and corners. Replace if they are loose, cracked, or missing.
- Check all moving parts including swing seats, ropes, cables, and chains for wear, rust, or other deterioration. Replace as needed.
- Check metal parts for rust. If found, sand and repaint using a non lead-based paint meeting the requirements of 16 CFR 1303.
- Check all wood members for deterioration and splinters. Sand down splinters and replace deteriorating wood members.
- Reinstall any plastic parts, such as swing seats or any other items that were removed for the cold season.
- Rake and check depth of loose fill protective surfacing materials to prevent compaction and to maintain appropriate depth. Replace as necessary.

Twice a month during play season

- Tighten all hardware.
- Check all protective coverings on bolts, pipes, edges, & corners. Replace if they are loose, cracked, or missing.
- Rake and check depth of loose fill protective surfacing materials to prevent compaction and to maintain appropriate depth. Replace as necessary.

Once a month during play season.

- Lubricate all metallic moving parts per manufacturer's instructions.
- Check all moving parts including swing seats, ropes, cables, and chains for wear, rust, or other deterioration. Replace as needed.

At the end of each season or when the temperature drops below 32° F

- Remove plastic swing seats and other items as specified by the manufacturer and take indoors or do not use.
- Rake and check depth of loose fill protective surfacing materials to prevent compaction and to maintain appropriate depth. Replace as necessary.

Additional Maintenance

- Check the swing beam and hardware every two weeks due to wood expansion and contraction. It is particularly important that this procedure be followed at the beginning of each season.
- Inspect wood parts monthly. The grain of the wood sometimes will lift in the dry season causing splinters to appear. Light sand may be necessary to maintain a safe playing environment. Treat your playset with stain regularly, to help prevent severe checking/splitting and other weather damage.
- A waterborne transparent stain has been applied to your playset. This is done for color only. Once or twice a year, depending on your climate conditions, you must apply some type of protection (sealant) to the wood of your unit. Prior to the application of sealant, lightly sand any "rough" spots on your playset. Please note this is a requirement of your warranty.
- Assembling and maintaining the playset on a level location is very important. As your children play, your playset will slowly dig its way into the soil, and it is very important that it settles evenly. Make sure the playset is level and true one each year or at the beginning of each play season.

Disposal Instructions

When the Playcenter use is no longer desired, it should be disassembled and disposed of in such a way that no unreasonable hazards will exist at the time the unit is discarded.

Third Party Assembly

- Customer may, in their sole discretion, elect to use a third party person or service to assemble this product. Backyard Discovery assumes no responsibility or liability for any charge incurred by the Customer for any assembly services'. Please see our warranty for more information about damaged and missing part replacement coverage. Backyard Discovery will not reimburse Customer for the price of parts purchased
- Modifications made by the consumer to the original activity toy shall be carried out according to the instructions of the manufacturer. In particular, instructions shall be provided with kit/accessory about the installation of rope/nets concerning the minimum diameter, the need for fixation ends, overall length, and positioning in relation to other at both structures.

OWNERS SHALL BE RESPONSIBLE FOR MAINTAINING THE LEGIBILITY OF THE WARNING LABELS

Your Backyard Discovery structure is designed and constructed of quality materials. As with all outdoor products it will weather and wear. To maximize the enjoyment, safety and life of your structure it is important that you properly maintain it.

About Our Wood

Backyard Discovery uses 100% Cedar (C. Lanceolata) wood. Although we take great care in selecting the best quality lumber available, wood is still a product of nature and susceptible to weathering which can change the appearance of your set.

What causes weathering? Does it affect the strength of my product?

One of the main reasons for weathering is the effects of water (moisture); the moisture content of the wood at the surface is different than the interior of the wood. As the climate changes, moisture moves in or out of the wood, causing tension which can result in checking and or warping. You can expect the following due to weathering. These changes will not affect the strength of the product:

1. Checking is surface cracks in the wood along the grain. A post (4" x 4") will experience more checking than a board (1" x 4") because the surface and interior moisture content will vary more widely than in thinner wood.

2. Warping results from any distortion (twisting, cupping) from the original plane of the board and often happens from rapid wetting and drying of the wood.

3. Fading happens as a natural change in the wood color as it is exposed to sun-light and will turn grey over time.

How can I reduce the amount of weathering to wood product?

1. Your wood product is coated with a water-based stain. Sunlight will break down the coating, so we recommend applying a water repellent or stain on a yearly basis (see your local stain and paint supplier for a recommended product). You must apply some type of protection (sealant) to the wood of your product. **Please note this is a requirement of your warranty.** Most weathering is just the normal result of nature and will not affect safety. However if you are concerned that a part has experienced a severe weathering problem please call our customer service department for further assistance.

2. Inspect wood parts monthly. The grain of the wood sometimes will lift in the dry season causing splinters to appear. Light sanding may be necessary to maintain a safe environment. Treating your Product with protection (sealant) after sanding will help prevent severe checking/ splitting and other weather damage.

Protrusion Hazard

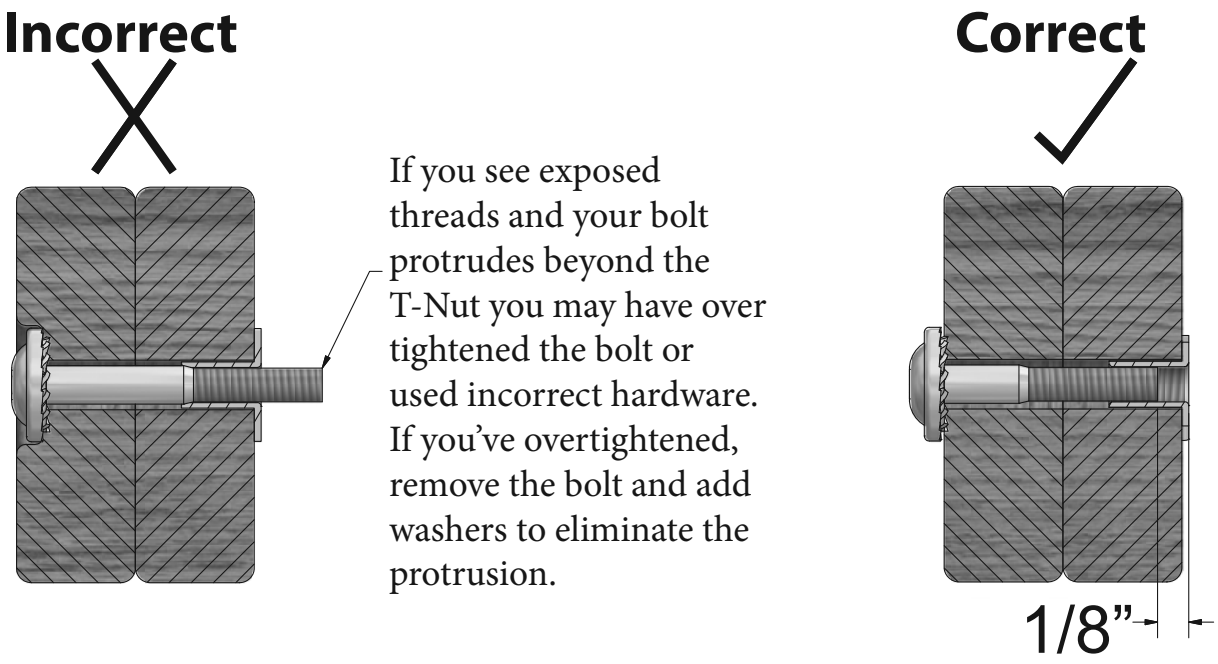

If you see exposed threads and your bolt protrudes beyond the T-Nut you may have over tightened the bolt or used incorrect hardware. If you've overtightened, remove the bolt and add washers to eliminate the protrusion.

Proper Hardware Assembly

Bolt and T-Nut Assembly
Tap T-nut into the provided hole. Insert your bolt through the lock washer and insert into the provided hole opposite from the T-Nut. Turn clockwise to thread into T-nut. Do not completely tighten until instructed.

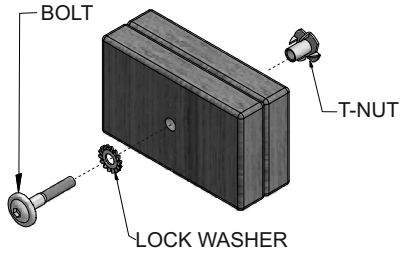

Bolt and Barrel Nut Assembly
Insert barrel nut through the lock washer and press the pair through the provided hole. Insert your bolt through the second lock washer and insert the pair into the provided hole opposite from the barrel nut. Turn clockwise to thread into the barrel nut. Do not completely tighten until instructed.

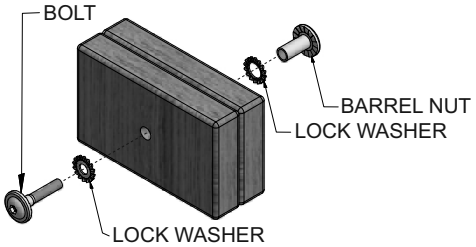

Lag Assembly
Normally there will be a pre-drilled pilot hole on assemblies that require a Lag Screw. If there is no pilot hole, line up the two boards as they are to be attached and use the factory drilled hole as a guide to drill another pilot hole into the adjoining board. This will keep the wood from splitting. Only a lock washer is required for steps with Lag Screws.

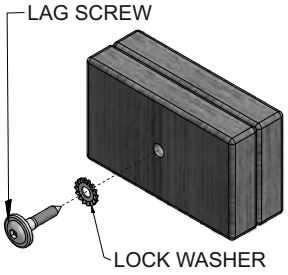

ASSEMBLY TIP:

Keep an eye out for these boxes which will contain helpful pictures and information making the assembly process as quick and painless as possible.

Sorting Wood

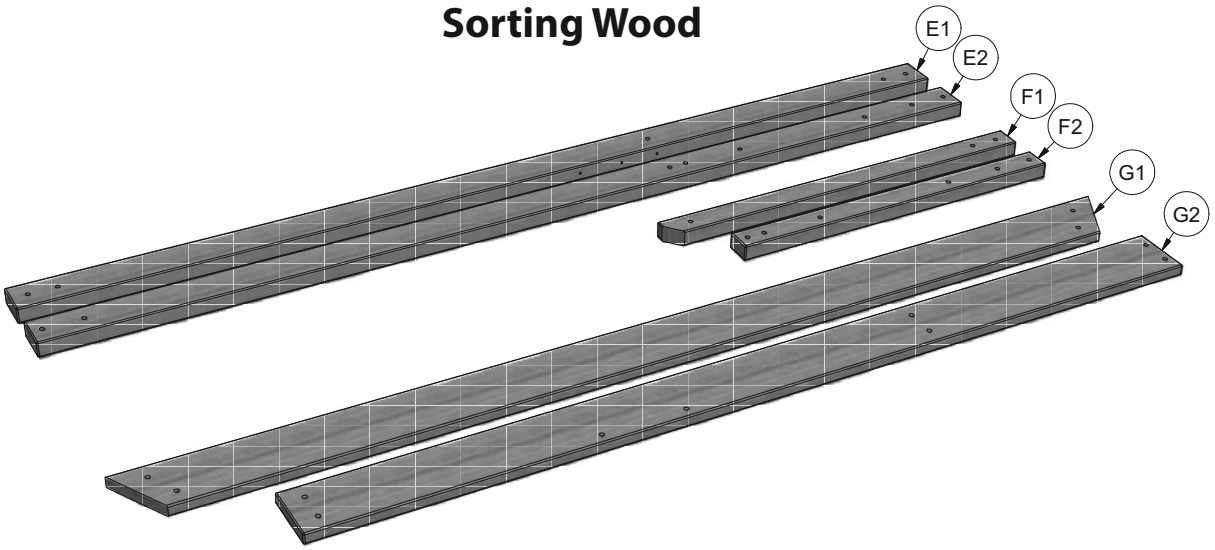

When removing the wood from the boxes we recommend arranging them by part number before you begin assembly. This will allow for faster assembly and easily identify any parts that may be missing or damaged.

Sorting Hardware

NUT BARREL H100545

SCREW H100695

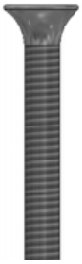

T-NUT H100699

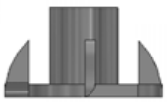

WASHER FLAT H100706

BOLT HEX H100716

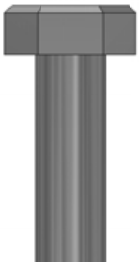

BOLT H100718

SCREW PWH H100742

To help with assembly we recommend sorting your hardware bags with the seven digit alpha-numeric number printed on the bags or by hardware type (i.e. bolts, nuts, etc.). Organizing your hardware will make assembly easier.

Hardware Identification

Hardware bags are printed with a seven digit alpha-numeric part number. During assembly you only need to reference the last three digits of the part number as noted in each step. This will make finding the correct hardware easier.

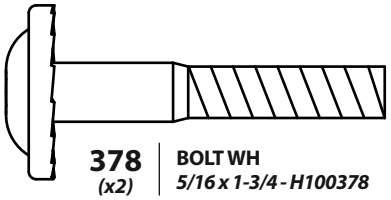

378 *(x2)* | **BOLT WH** *5/16 x 1-3/4 - H100378*

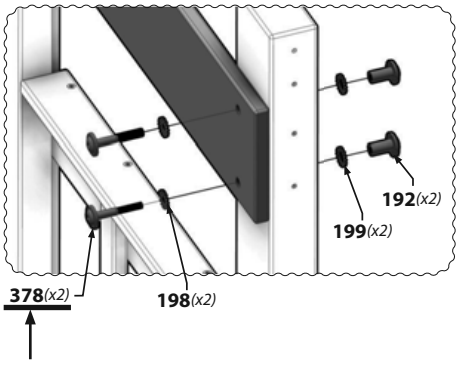

Tools Required for Installation

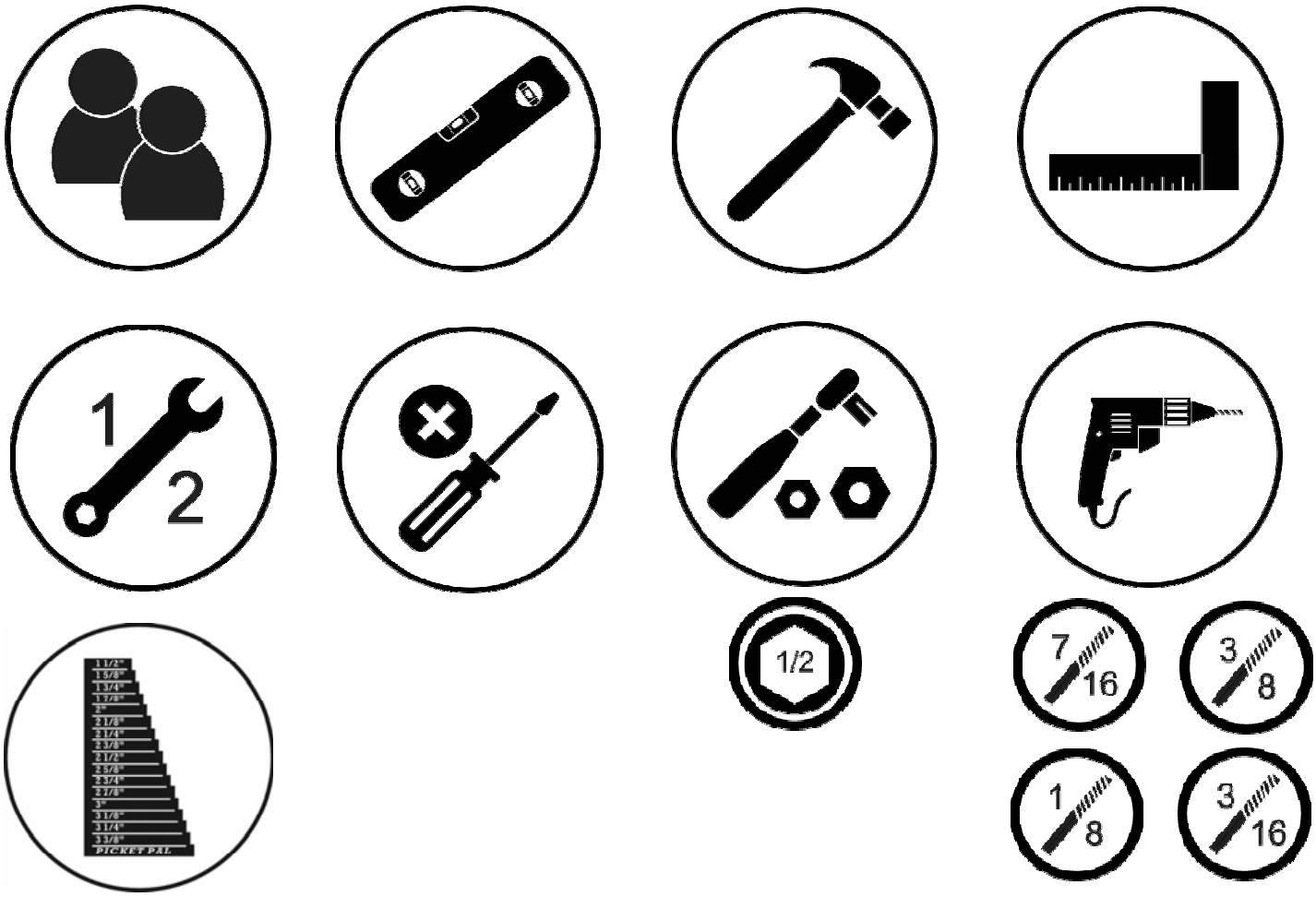

Icons and their uses you will see throughout this manual

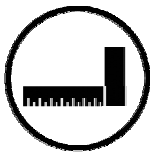

You will need to make sure that your assembly is square before tightening your bolts.

For proper assembly you will need to ensure that your structure is level before proceeding to the next step.

Some steps in the assembly process will require an extra set of hands. Make sure you have a helper available.

This icon shows the size of an open ended wrench. Using the wrench as the fraction bar.

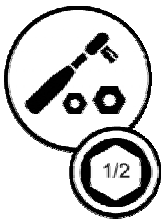

When you see this icon you will need a socket wrench. The icons below show the size of attachments needed for assembly 1/2.

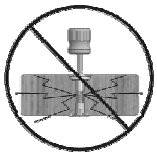

This icon warns you to not over tighten your bolts. This is to prevent structural damage and also splintering your wood.

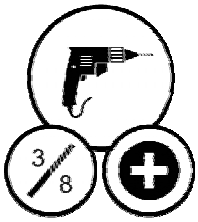

This icon will show you what drill attachments are needed. For this example you will need a Phillips head attachment and 3/8 socket.

Basic Setup Dimensions & Assembly Notes

Place the set on level ground, not less than 6'-7" [2 m] from any structure or obstruction such as a fence, garage, house, overhanging branches, laundry lines, or electrical wires.

- While assembling unit, take time before and after each phase to make sure fort is level. If fort is not level, assembly will be difficult and improper assembly may result. Extra care must be taken to insure the fort is square.
- The safe play area refers to a zone extending 6'-7" (2m) beyond the play product on all sides, including the space above the play product.

SAFE PLAY AREA DIAGRAM

Ground Dimension

EXAMPLE: 14' - 5" (4.4m) x 14' - 2" (4.3m) x 9' - 10 1/2" (3.0m)

Safe Play Area

EXAMPLE: 27' - 7 1/2" (8.4m) x 27' - 4" (8.3m)

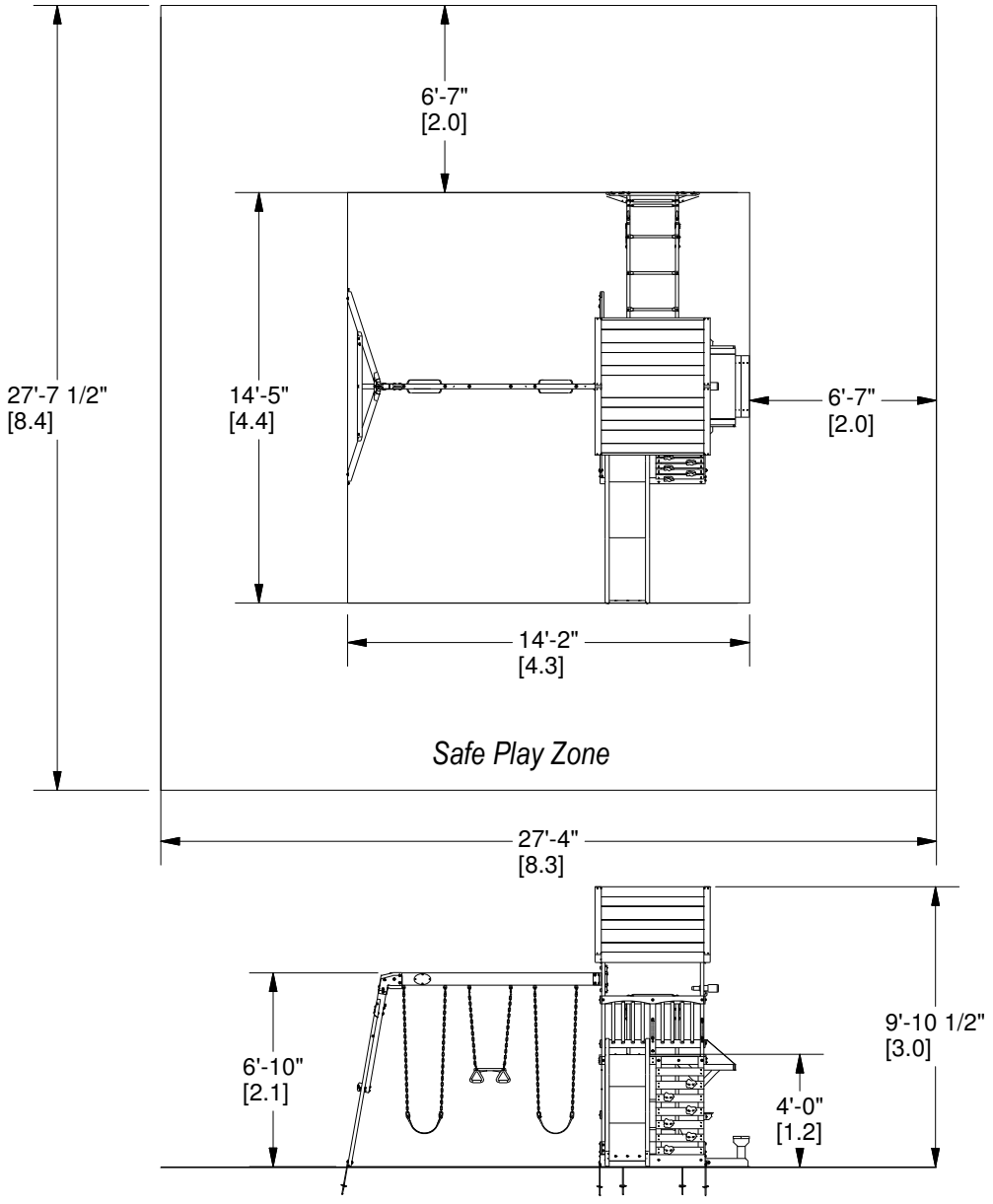

SAFE PLAY HEIGHT: 16'-5 1/2" [5.0 m]

MAXIMUM FALL HEIGHT: 6'-10" [2.1 m]

General Information:

Your set has been designed and engineered for children only and for residential use only.
A maximum of 150 lbs. per child is recommended for play activities designed for individual use.
A maximum of 120 lbs. per child is recommended for play activities designed for multiple child use.
A maximum of 9 children is recommended for this swing set.

Wood Components (Not to Scale)

E1 (1) | **UPRIGHT - W4L06890**
1 3/8"x3 3/8"x89 1/2" (36x86x2274)

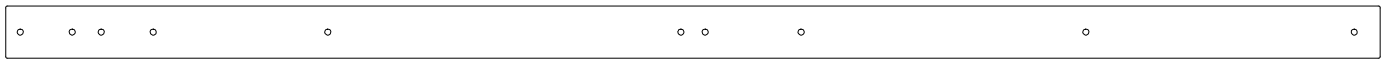

E2 (1) | **UPRIGHT - W4L06891**
1 3/8"x3 3/8"x89 1/2" (36x86x2274)

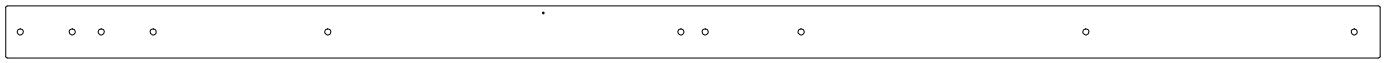

E3 (1) | **UPRIGHT - W4L06892**
1 3/8"x3 3/8"x89 1/2" (36x86x2274)

E4 (1) | **UPRIGHT - W2A01970**
1 3/8"x3 3/8"x89 1/2" (36x86x2274)

E5 (2) | **MONKEY BAR UPRIGHT - W4L13840**
1 3/8"x3 3/8"x70 3/8" (36x86x1786)

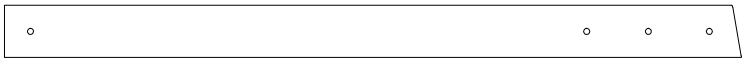

E7 (2) | **MONKEY BAR RAIL - W4L13841**
1 3/8"x3 3/8"x48" (36x86x1219)

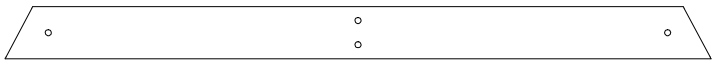

E50 (1) | **END SUPPORT - W4L13843**
1 3/8"x3 3/8"x46" (36x86x1168)

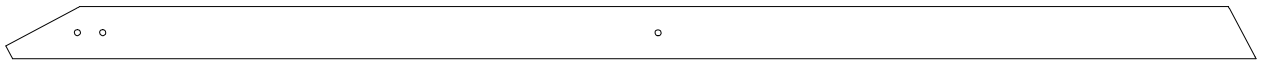

E77 (2) | **ANGLE BRACE - W4L13842**
1 3/8"x3 3/8"x81 3/8" (36x86x2068)

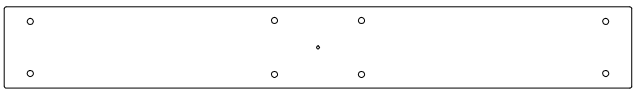

G1 (1) | **SWING BEAM MOUNT - W4L06945**
1"x5 1/4"x40 7/8" (24x134x1038)

G2 (2) | **SANBOX SEAT - W4L06433**
1"x5 1/4"x14 5/8" (24x134x370)

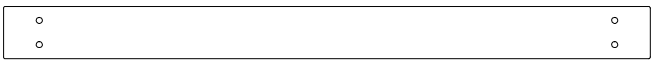

H1 (1) | **FLOOR RAIL - W4L06898**
1"x3 3/8"x42 1/8" (24x86x1070)

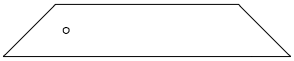

H2 (4) | **DECK BRACE - W4L06909**
1"x3 3/8"x18 3/4" (24x86x475)

Wood Components (Not to Scale)

H3 (1) | **FLOOR SUPPORT - W4L06915**
1"x3 3/8"x40 7/8" (24x86x1038)

H4 (2) | **HORIZONTAL TARP SUPPORT - W4L13838**
1"x3 3/8"x56 1/8" (24x86x1425)

H5 (2) | **HORIZONTAL TARP SUPPORT - W4L13839**
1"x3 3/8"x48 3/4" (24x86x1237)

H6 (4) | **ROOF BOARD - W4L06950**
1"x3 3/8"x40 3/8" (24x86x1025)

H7 (2) | **BENCH GROUND BOARD - W4L06967**
1"x3 3/8"x18 1/8" (24x86x460)

H8 (2) | **BENCH UPRIGHT - W4L06968**
1"x3 3/8"x11 3/4" (24x86x300)

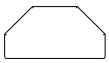

H9 (2) | **BENCH SEAT SUPPORT - W4L06969**
1"x3 3/8"x6 1/2" (24x86x166)

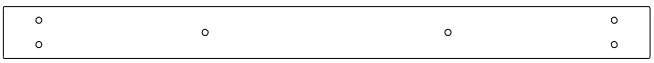

H10 (1) | **FLOOR RAIL - W4L07317**
1"x3 3/8"x42 1/8" (24x86x1070)

H12 (2) | **BENCH SEAT - W4L13837**
1"x3 3/8"x26" (24x86x660)

H81 (2) | **MONKEY BAR BRACE - W4L13849**
1"x3 3/8"x18 5/8" (24x86x474)

J1 (1) | **WALL RAIL - W4L06900**
1"x2 3/8"x40 7/8" (24x60x1038)

J2 (2) | **SHELF SUPPORT - W4L06903**
1"x2 3/8"x2 3/8" (24x60x60)

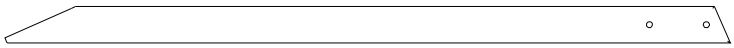

J3 (1) | **ANGLE BRACE - W4L06905**
1"x2 3/8"x47 1/4" (24x60x1200)

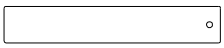

J4 (2) | **AWNING BOARD - W4L06906**
1"x2 3/8"x14 1/8" (24x60x358)

J5 (2) | **AWNING SUPPORT - W4L06908**
1"x2 3/8"x11 3/4" (24x60x298)

J6 (1) | **LADDER RAIL - W4L13845**
1"x2 3/8"x50 3/8" (24x60x1279)

J7 (1) | **LADDER RAIL - W4L13846**
1"x2 3/8"x50 3/8" (24x60x1279)

J8 (1) | **WALL BOARD - W4L06947**
1"x2 3/8"x25" (24x60x634)

J9 (4) | **SUPPORT BOARD - W4L06064**
1"x2 3/8"x3" (24x60x76)

J10 (2) | **ROOF BOARD - W4L06952**
1"x2 3/8"x4" (24x60x102)

Wood Components (Not to Scale)

K1 (1) | **GROUND BOARD - W4L13848**
5/8"x5 1/4"x80 3/8" (16x134x2043)

K2 (4) | **GROUND BOARD - W4L06894**
5/8"x5 1/4"x43 1/4" (16x134x1097)

K3 (2) | **GROUND BOARD - W4L06896**
5/8"x5 1/4"x42 1/8" (16x134x1070)

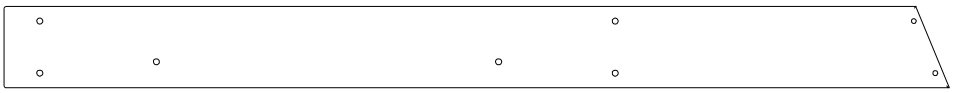

K4 (1) | **GROUND BOARD - W4L13847**
5/8"x5 1/4"x61 1/2" (16x134x1564)

K5 (1) | **SERVING SHELF - W4L06902**
5/8"x5 1/4"x40 7/8" (16x134x1038)

K6 (1) | **GROUND BOARD - W4L13852**
5/8"x5 1/4"x44 1/2" (16x134x1129)

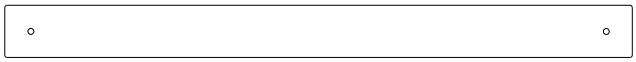

M1 (1) | **SAFETY BOARD - W4L06895**
5/8"x3 3/8"x40 7/8" (16x86x1038)

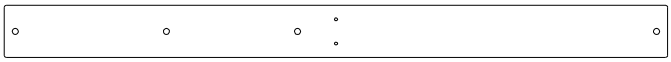

M2 (1) | **FLOOR RAIL - W4L06897**
5/8"x3 3/8"x43 1/4" (16x86x1097)

M3 (1) | **LADDER RUNG - W4L06912**
5/8"x3 3/8"x20 1/4" (16x86x515)

M4 (6) | **LADDER RUNG - W4L06913**
5/8"x3 3/8"x20 1/4" (16x86x515)

M5 (1) | **FLOOR RAIL - W4L06914**
5/8"x3 3/8"x43 1/4" (16x86x1097)

M6 (10) | **FLOOR BOARD - W4L06918**
5/8"x3 3/8"x45 1/8" (16x86x1145)

M7 (2) | **WALL RAIL - W4L06919**
5/8"x3 3/8"x41 1/2" (16x86x1054)

M8 (2) | **WALL RAIL - W4L06920**
5/8"x3 3/8"x42 1/8" (16x86x1070)

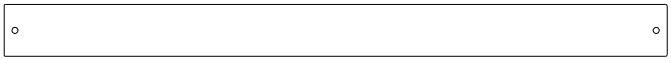

M9 (1) | **WALL RAIL - W4L06941**
5/8"x3 3/8"x43 1/4" (16x86x1097)

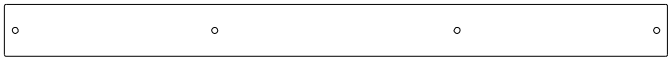

M10 (1) | **WALL RAIL - W4L06942**
5/8"x3 3/8"x43 1/4" (16x86x1097)

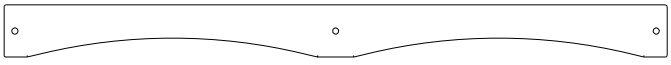

M11 (1) | **ARCHED WALL RAIL - W4L06943**
5/8"x3 3/8"x43 1/4" (16x86x1097)

Wood Components (Not to Scale)

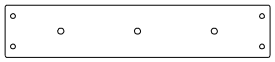

M77 (1) | **SLIDE BRACE - W100544**
5/8"x3 3/8"x17 1/4" (16x86x438)

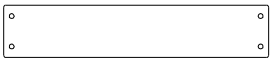

M78 (2) | **CENTER SLIDE BRACE - W100545**
5/8"x3 3/8"x17 1/4" (16x86x438)

M82 (1) | **MONKEY BAR GROUND BOARD - W4L13850**
5/8"x3 3/8"x39 5/8" (16x86x1006)

N1 (1) | **AWNING BOARD - W4L06907**
5/8"x2 3/8"x34 1/8" (16x60x866)

N2 (2) | **ROOF BOARD - W4L06953**
5/8"x2 3/8"x33 1/8" (16x60x840)

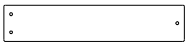

N3 (2) | **SUNBURST BOARD - W4L06955**
5/8"x2 3/8"x11 3/4" (16x60x299)

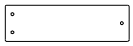

N4 (4) | **SUNBURST BOARD - W4L06956**
5/8"x2 3/8"x8 1/8" (16x60x205)

O1 (7) | **PICKET - W4L06901**
5/8"x1 3/8"x13 1/4" (16x34x336)

O2 (23) | **PICKET - W4L06944**
5/8"x1 3/8"x18 1/4" (16x34x465)

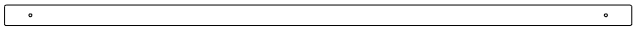

O3 (2) | **SAFETY BOARD - W4L06948**
5/8"x1 3/8"x40 7/8" (16x34x1038)

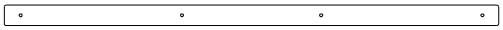

O4 (1) | **AWNING BOARD - W4L06957**
5/8"x1 3/8"x32 1/4" (16x34x818)

Q2 (4) | **SANDBOX SEAT SUPPORT - W4L06434**
1"x4 3/8"x8" (24x112x202)

SB74 (1) | **SWING BEAM EXTENDED - W4L06961**
2"x5 1/4"x89 1/2" (50x134x2274)

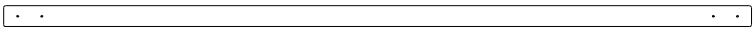

T1 (1) | **ROOF BOARD - W4L06951**
1"x1 3/8"x48 3/4" (24x34x1237)

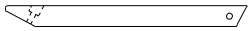

T2 (2) | **SAFETY BOARD - W4L13853**
1"x1 3/8"x15 3/4" (24x34x400)

W71 (1) | **SWING BEAM SUPPORT - W4L13844**
2"x3 3/8"x49 5/8" (50x86x1260)

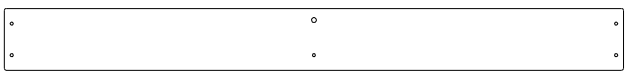

Y1 (1) | **FLOOR BOARD - W4L13851**
5/8"x4"x40 3/8" (16x102x1024)

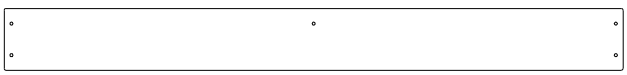

Y2 (1) | **FLOOR BOARD - W4L06917**
5/8"x4"x40 3/8" (16x102x1024)

Y3 (2) | **SUNBURST HALF MOON - W4L06954**
5/8"x4"x12" (16x102x306)

Hardware Components

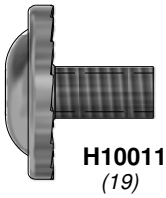

H100115 | **BOLT WH**
(19) | *5/16x1/2*

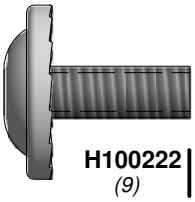

H100222 | **BOLT WH**
(9) | *5/16x3/4*

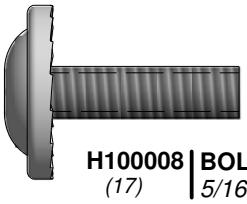

H100008 | **BOLT WH**
(17) | *5/16x1*

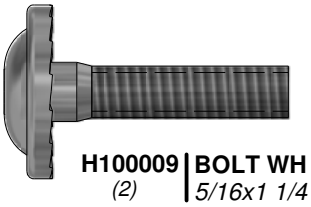

H100009 | **BOLT WH**
(2) | *5/16x1 1/4*

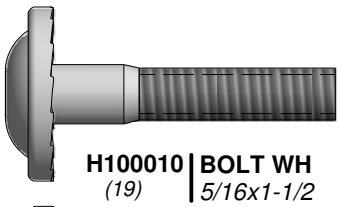

H100010 | **BOLT WH**
(19) | *5/16x1-1/2*

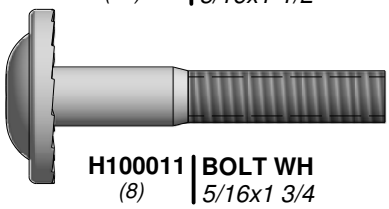

H100011 | **BOLT WH**
(8) | *5/16x1 3/4*

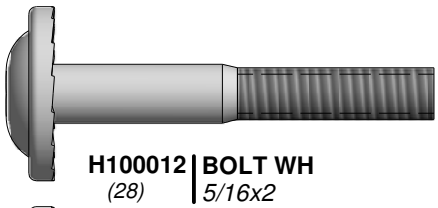

H100012 | **BOLT WH**
(28) | *5/16x2*

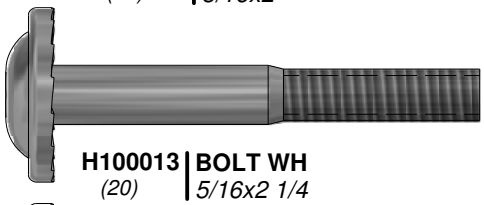

H100013 | **BOLT WH**
(20) | *5/16x2 1/4*

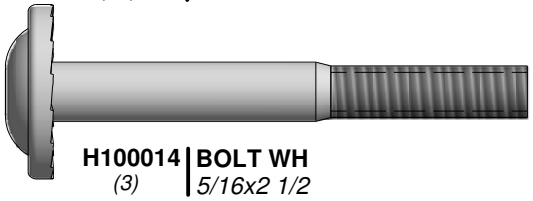

H100014 | **BOLT WH**
(3) | *5/16x2 1/2*

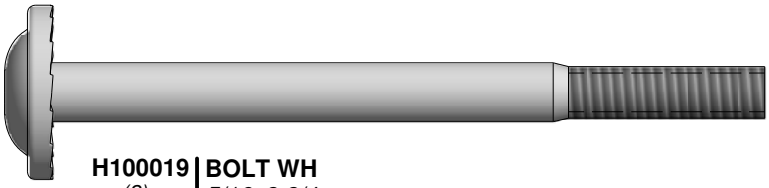

H100019 | **BOLT WH**
(2) | *5/16x3 3/4*

H100016 | **BOLT WH**
(2) | *5/16x3*

H100029 | **LAG SCREW WH**
(1) | *5/16x3*

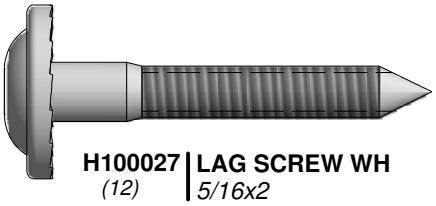

H100027 | **LAG SCREW WH**
(12) | *5/16x2*

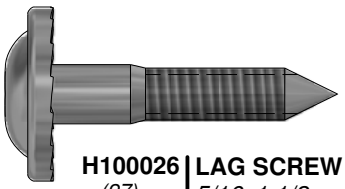

H100026 | **LAG SCREW WH**
(27) | *5/16x1 1/2*

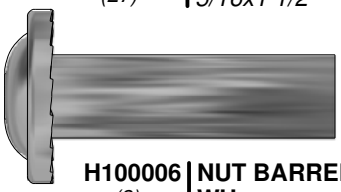

H100006 | **NUT BARREL WH**
(3) | 5/16x1 1/2

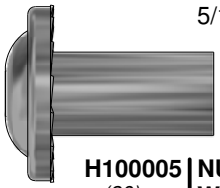

H100005 | **NUT BARREL WH**
(30) | 5/16x7/8

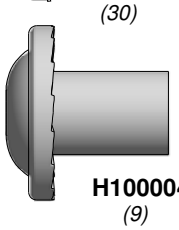

H100004 | **NUT BARREL WH**
(9) | 5/16 x 5/8

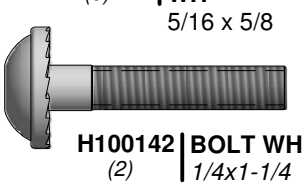

H100142 | **BOLT WH**
(2) | *1/4x1-1/4*

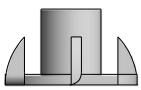

H100072 | **T-NUT**
(15) | *1/4*

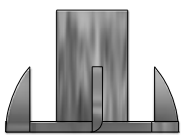

H100074 | **T-NUT**
(86) | *5/16*

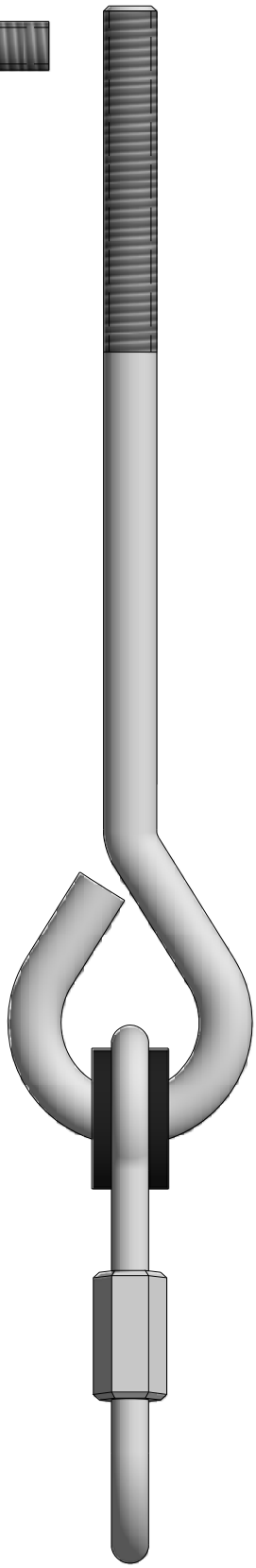

H100099 | **SWING HANGER**
(6) | 5/16x9 1/2

Hardware Components

H100084 | **SCREW PFH**
(4) | *6x3/4*

H100085 | **SCREW PFH**
(13) | *8x1*

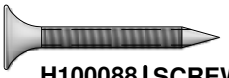

H100088 | **SCREW PFH**
(92) | *8x1 1/8*

H100087 | **SCREW PFH**
(39) | *8x1 1/4*

H100086 | **SCREW PFH**
(96) | *8x1 1/2*

H100089 | **SCREW PFH**
(60) | *8x1 3/4*

H100111 | **SCREW PFH**
(4) | *8x2*

H100090 | **SCREW PFH**
(26) | *8x2 1/2"*

H100042 | **BOLT HEX**
(4) | *5/16x1 1/4*

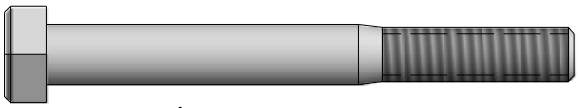

H100047 | **BOLT HEX**
(4) | *5/16x2 3/4*

H100063 | **BOLT PTH**
(13) | *1/4x3/4*

H100128 | **SCREW PWH**
(17) | *8x5/8*

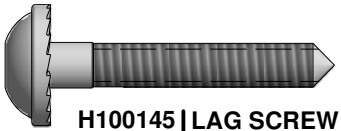

H100145 | **LAG SCREW WH**
(30) | *1/4x1 1/2*

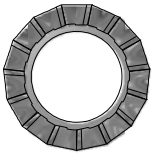

H100031 | **WASHER LOCK EXT**
(35) | 12x19

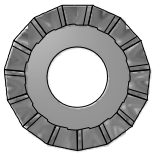

H100030 | **WASHER LOCK EXT**
(105) | 8x19

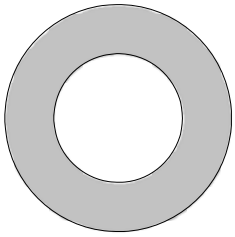

H100103 | **WASHER SAFETY**
(7) | 17x30

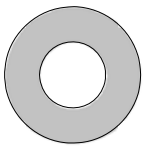

H100106 | **WASHER FLAT**
(2) | 9x18

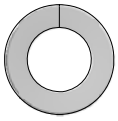

H100095 | **WASHER SPLIT**
(4) | 5/16

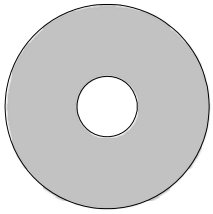

H100105 | **WASHER FLAT**
(16) | 8x27

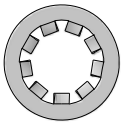

H100108 | **WASHER LOCK INT**
(17) | 8x15

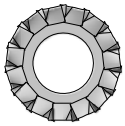

H100138 | **WASHER LOCK EXT**
(18) | 6x15

H100110 | **NUT LOCK**
(9) | *5/16*

H100764 | **SCREW SETTER**
(1)

A100042 | **T-40 TORX BIT**
(2)

H100147 | **T-30 TORX BIT**
(2)

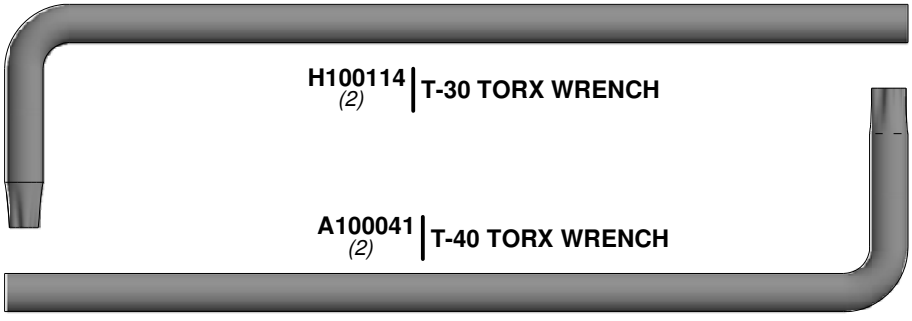

H100114 | **T-30 TORX WRENCH**
(2)

A100041 | **T-40 TORX WRENCH**
(2)

Accessory Components (Not to Scale)

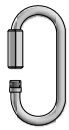

A100069 (6) | QUICK LINK

A4M00646 (2) | L BRACKET BLUE 32x51

A4M01048 (8) | L BRACKET 2.5x38x55x55

A100153 (2) | L BRACKET 66x66x127 BLUE

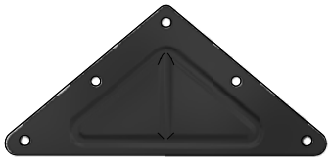

A100309 (2) | TRIANGLE PLATE BLUE 100 5 HOLE

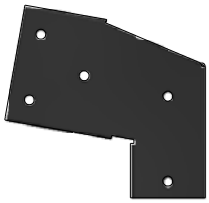

A4M00511 (1) | SWING BEAM EXT. BRACKET BLUE - LEFT

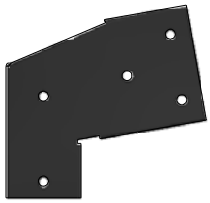

A4M00512 (1) | SWING BEAM EXT BRACKET BLUE - RIGHT

A100314 (1) | "A" REVISION TAG

A4M00524 (4) | CHAIN BLUE 51.25"

A4M00525 (2) | CHAIN BLUE 31"

A4M00585 (5) | METAL RUNG 559 BLUE

A100178 (8) | AUGER GROUND STAKE

A6P00125 (1) | SHIPS WHEEL BLUE/LIME

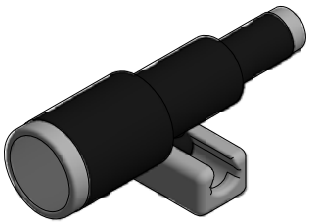

A6P00126 (1) | TELESCOPE BLUE/LIME

A4M01174 (1) | A-FRAME BRACKET

Accessory Components (Not to Scale)

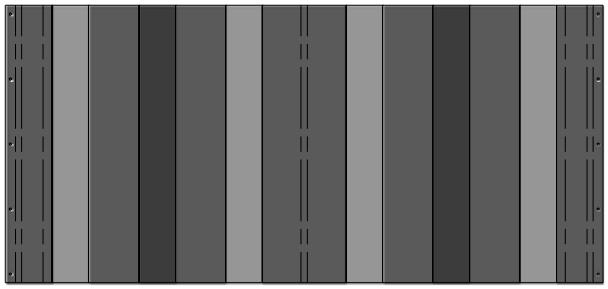

A6P00123 (1) | TARP

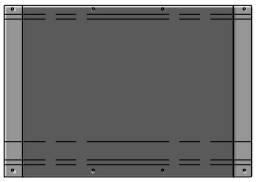

A6P00124 (1) | AWNING

A6P00131 (1) | SLIDE BED 8' LIME

A100161 (1) | SLIDE RAIL 8' BLUE RIGHT

A100162 (1) | SLIDE RAIL 8' BLUE LEFT

A6P00133 (2) | SWING SEAT BLUE 22"

A100164 (1) | BYD ID TAG (LARGE) AGES 3-10

A6P00128 (2) | LIME HC ROCK #2

A6P00040 (2) | BLUE HC ROCK #2

A6P00129 (2) | CRANBERRY HC ROCK #1

A6P00127 (4) | HAND GRIP LIME PLASTIC

A6P00134 (1) | BLUE TRAPEZE

SWING BEAM

STEP 1

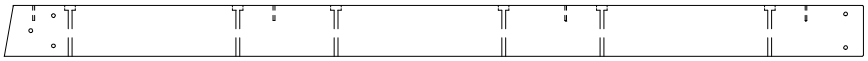

SB74 | **SWING BEAM EXTENDED - W4L06961**
(1) | *2"x5 1/4"x89 1/2" (50x134x2274)*

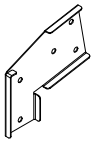

A4M00511 | **SWING BEAM EXT. BRACKET BLUE - LEFT**
(1)

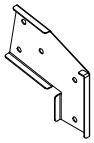

A4M00512 | **SWING BEAM EXT BRACKET BLUE - RIGHT**
(1)

A100153 | **L BRACKET 66x66x127 BLUE**
(2)

H100011 | **BOLT WH**
(3) | *5/16x1 3/4*

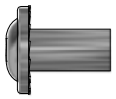

H100005 | **NUT BARREL WH**
(3) | *5/16x7/8*

H100047 | **BOLT HEX**
(2) | *5/16x2 3/4*

H100110 | **NUT LOCK**
(2) | *5/16*

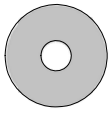

H100105 | **WASHER FLAT**
(4) | *8x27*

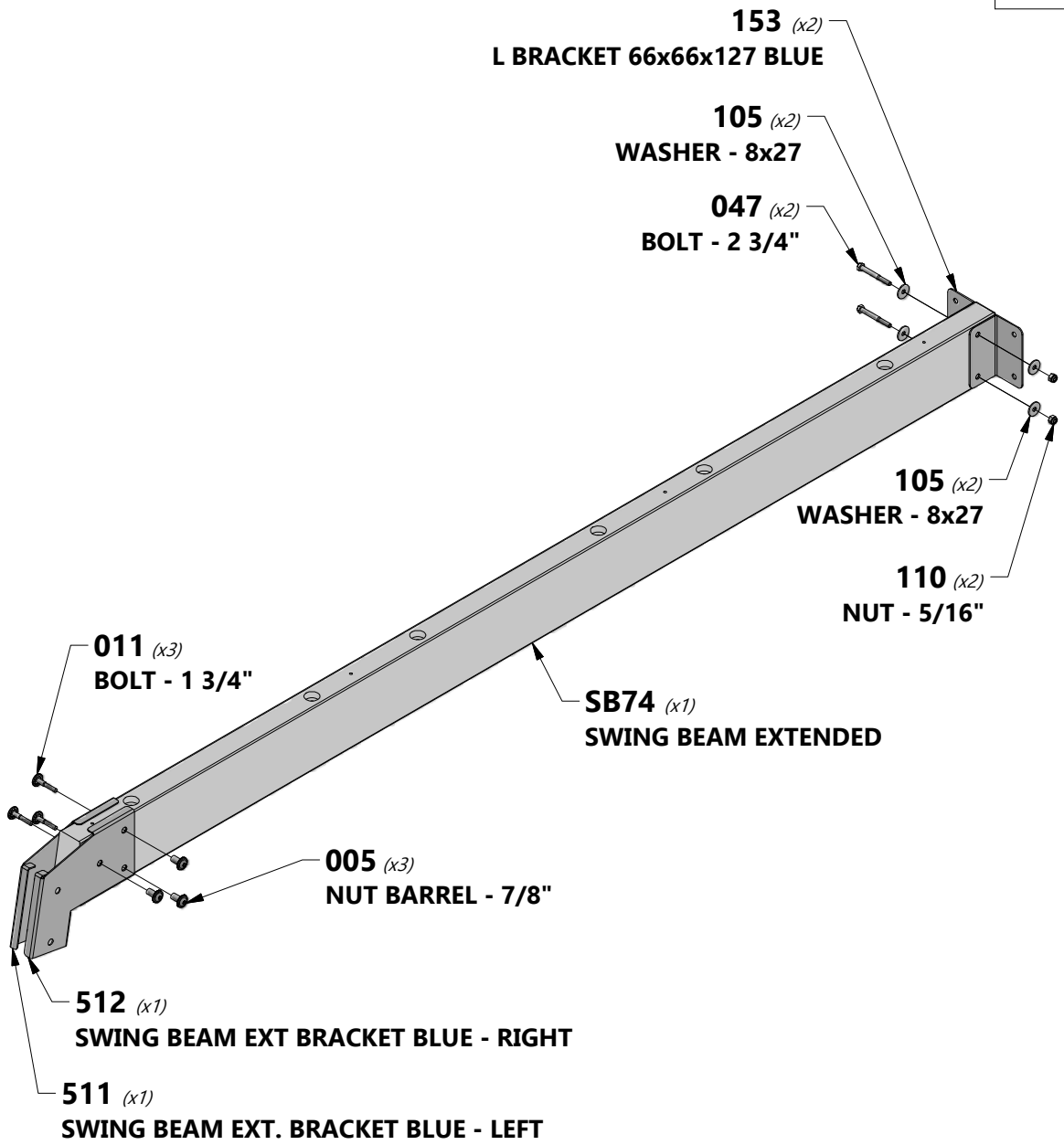

SWING BEAM

STEP 2

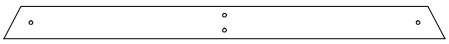

E50 | **END SUPPORT - W4L13843**
(1) | *1 3/8"x3 3/8"x46" (36x86x1168)*

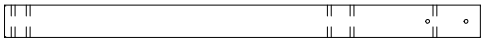

W71 | **SWING BEAM SUPPORT - W4L13844**
(1) | *2"x3 3/8"x49 5/8" (50x86x1260)*

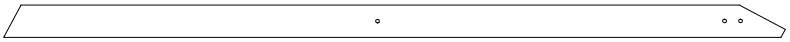

E77 | **ANGLE BRACE - W4L13842**
(2) | *1 3/8"x3 3/8"x81 3/8" (36x86x2068)*

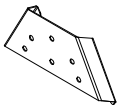

A4M01174 | **A-FRAME BRACKET**
(1)

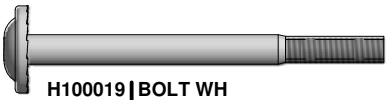

H100019 | **BOLT WH**
(2) | 5/16x3 3/4

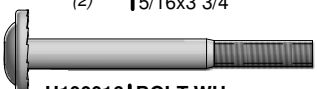

H100016 | **BOLT WH**
(2) | 5/16x3

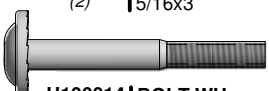

H100014 | **BOLT WH**
(2) | 5/16x2 1/2

H100006 | **NUT BARREL WH**
(2) | 5/16x1 1/2

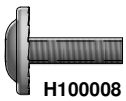

H100008 | **BOLT WH**
(4) | 5/16x1

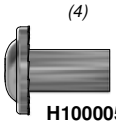

H100005 | **NUT BARREL WH**
(8) | 5/16x7/8

H100031 | **WASHER LOCK EXT**
(10) | 12x19

H100030 | **WASHER LOCK EXT**
(4) | 8x19

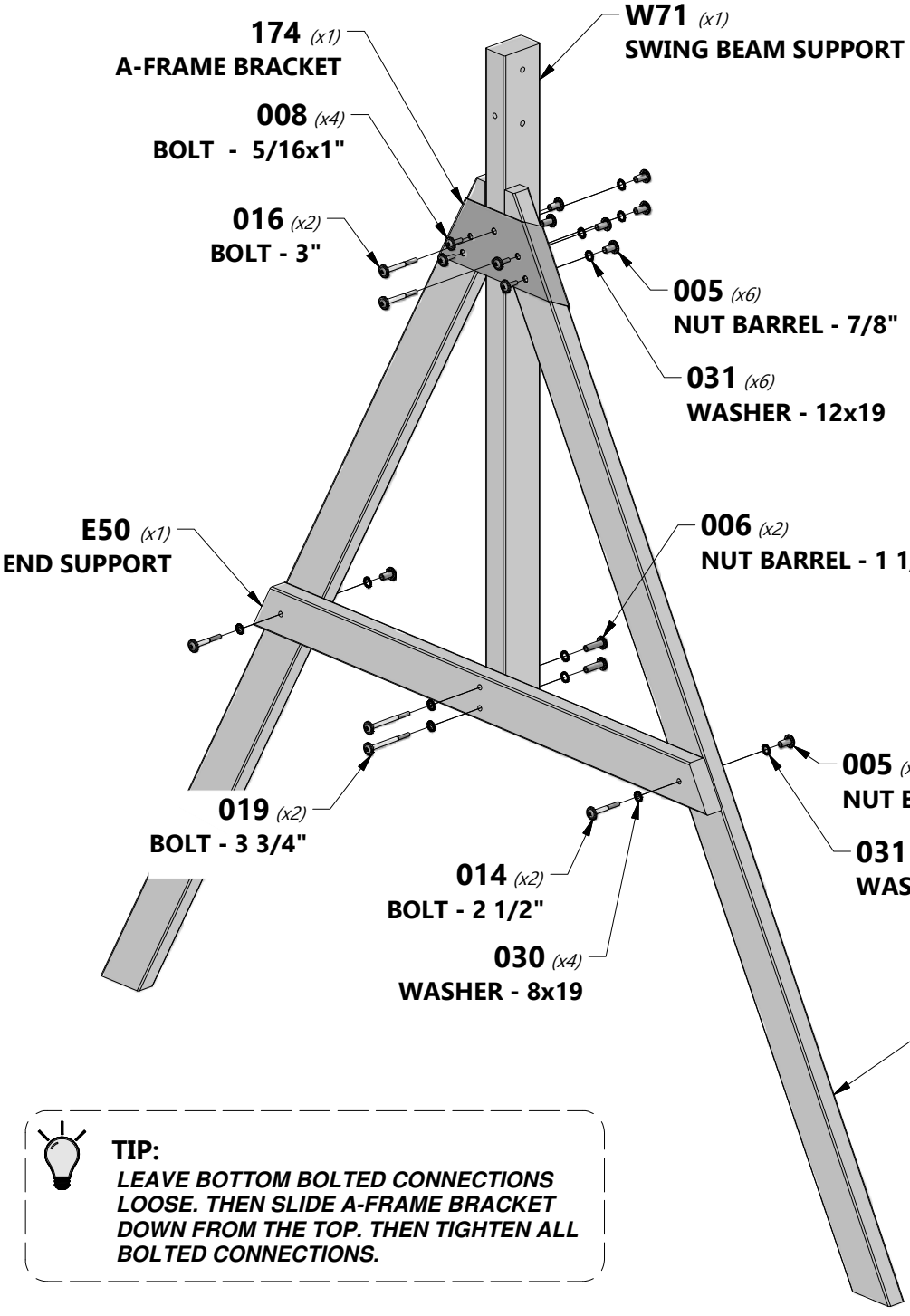

TIP:
LEAVE BOTTOM BOLTED CONNECTIONS LOOSE. THEN SLIDE A-FRAME BRACKET DOWN FROM THE TOP. THEN TIGHTEN ALL BOLTED CONNECTIONS.

SWING BEAM

STEP 3

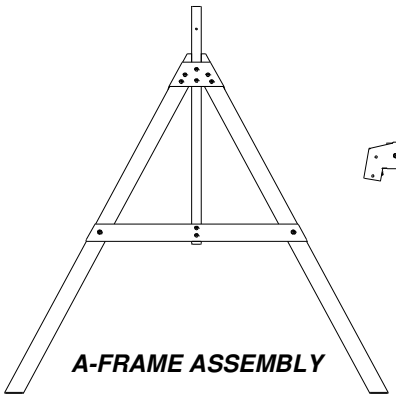

A-FRAME ASSEMBLY

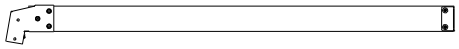

BEAM ASSEMBLY

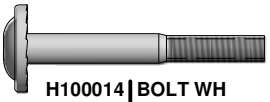

H100014 | **BOLT WH** 5/16x2 1/2
(1)

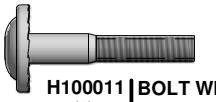

H100011 | **BOLT WH** *5/16x1 3/4*
(2)

H100006 | **NUT BARREL WH** 5/16x1 1/2
(1)

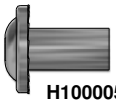

H100005 | **NUT BARREL WH** 5/16x7/8
(2)

H100031 | **WASHER LOCK EXT** 12x19
(1)

H100030 | **WASHER LOCK EXT** 8x19
(1)

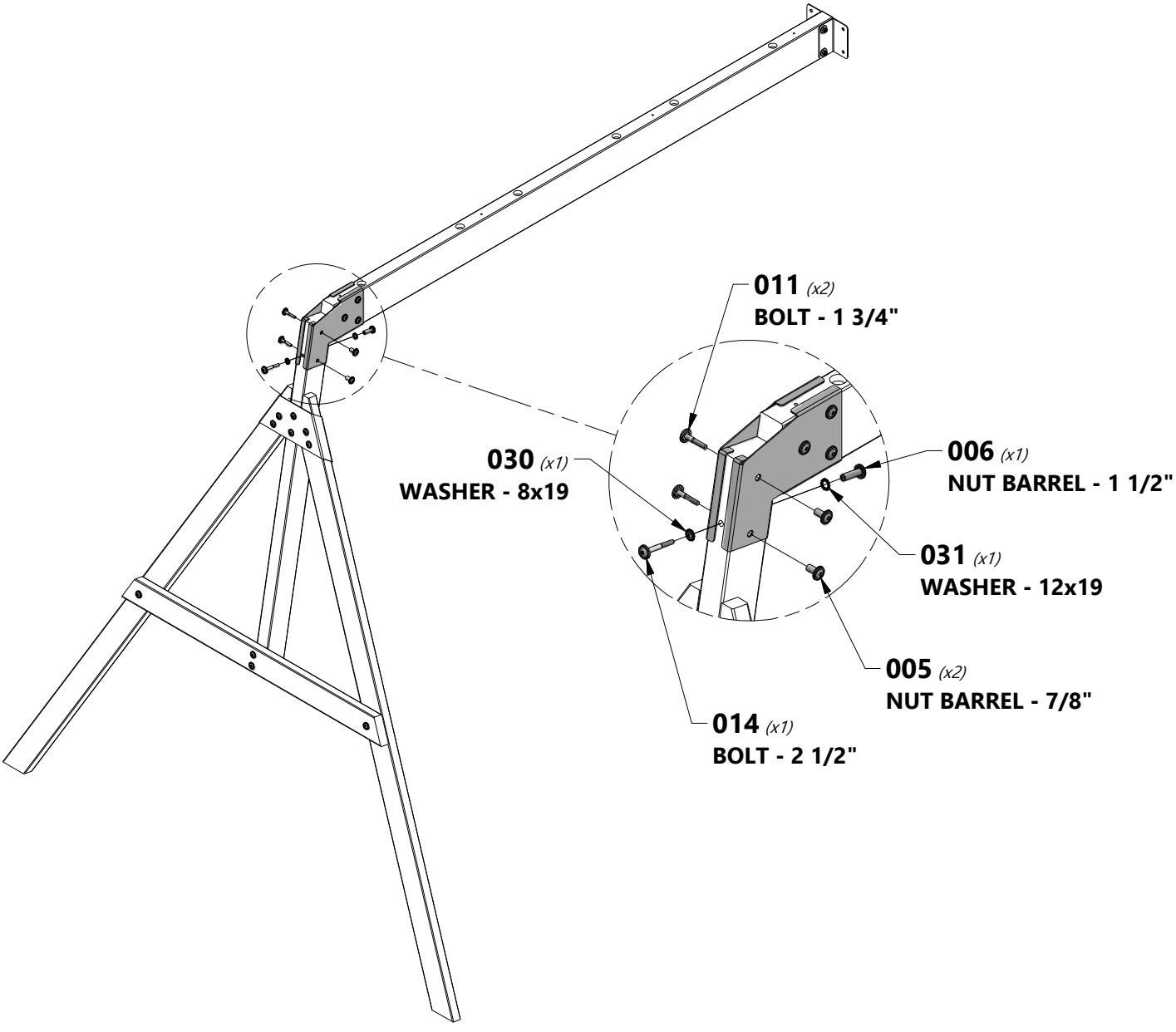

SWING BEAM

STEP 4

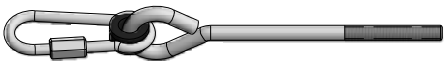

H100099 (6) | 9 1/2" SWING HANGER QUICK LINK

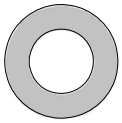

H100103 (6) | WASHER SAFETY 17x30

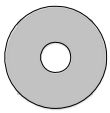

H100105 (6) | WASHER FLAT 8x27

H100110 (6) | NUT LOCK 5/16

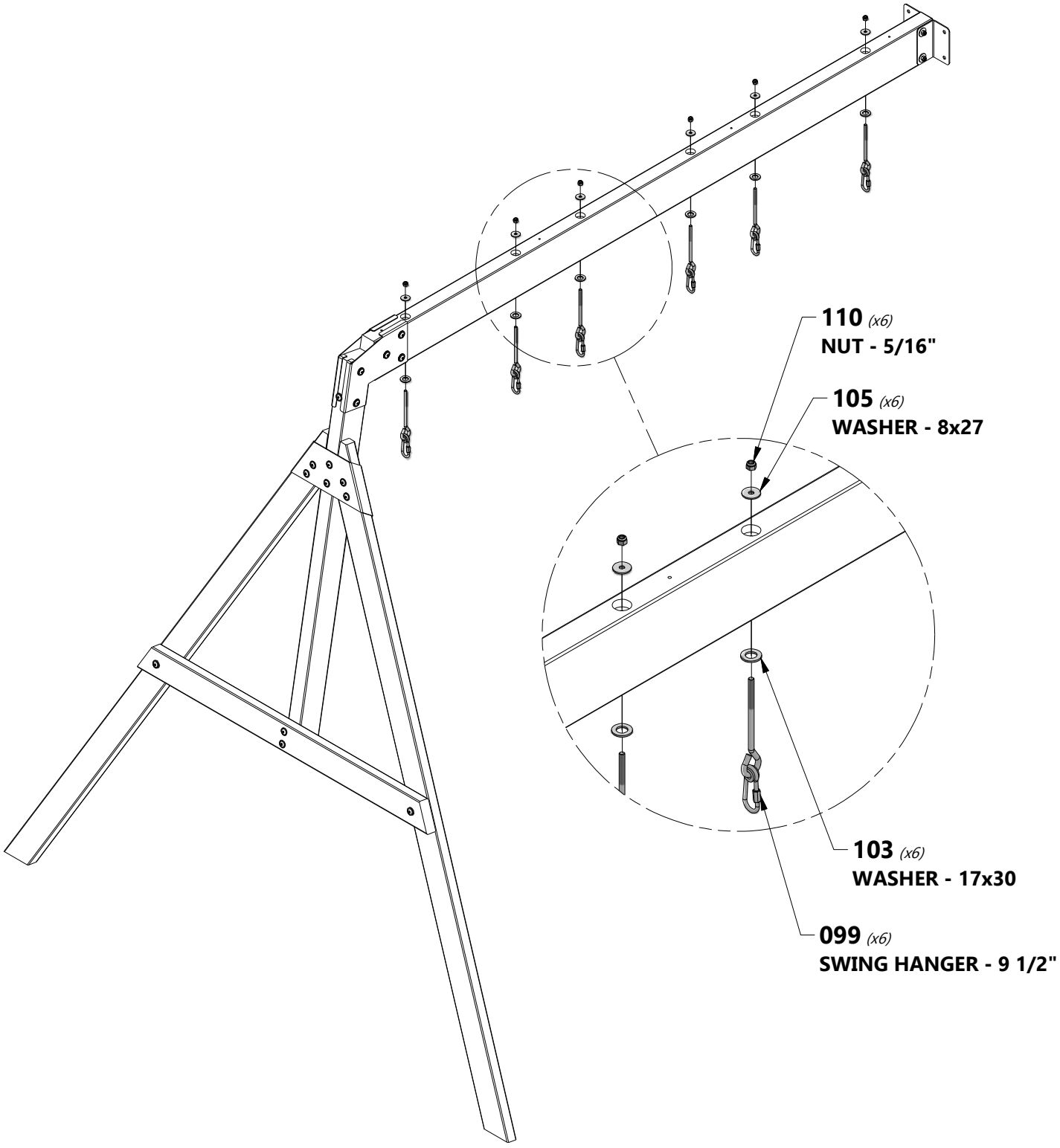

MONKEY BAR

STEP 1

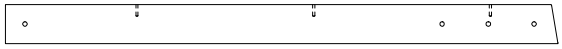

E7 | **MONKEY BAR RAIL - W4L13841**
(1) | *1 3/8"x3 3/8"x48" (36x86x1219)*

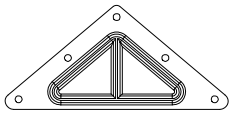

A100309 | **TRIANGLE PLATE BLUE 100 5 HOLE**
(1)

A4M01048 | **L BRACKET 2.5x38x55x55**
(1)

H100010 | **BOLT WH** *5/16x1-1/2*
(3)

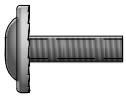

H100008 | **BOLT WH** *5/16x1*
(1)

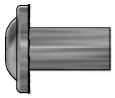

H100005 | **NUT BARREL WH 5/16x7/8**
(1)

H100074 | **T-NUT** *5/16*
(3)

H100030 | **WASHER LOCK EXT 8x19**
(1)

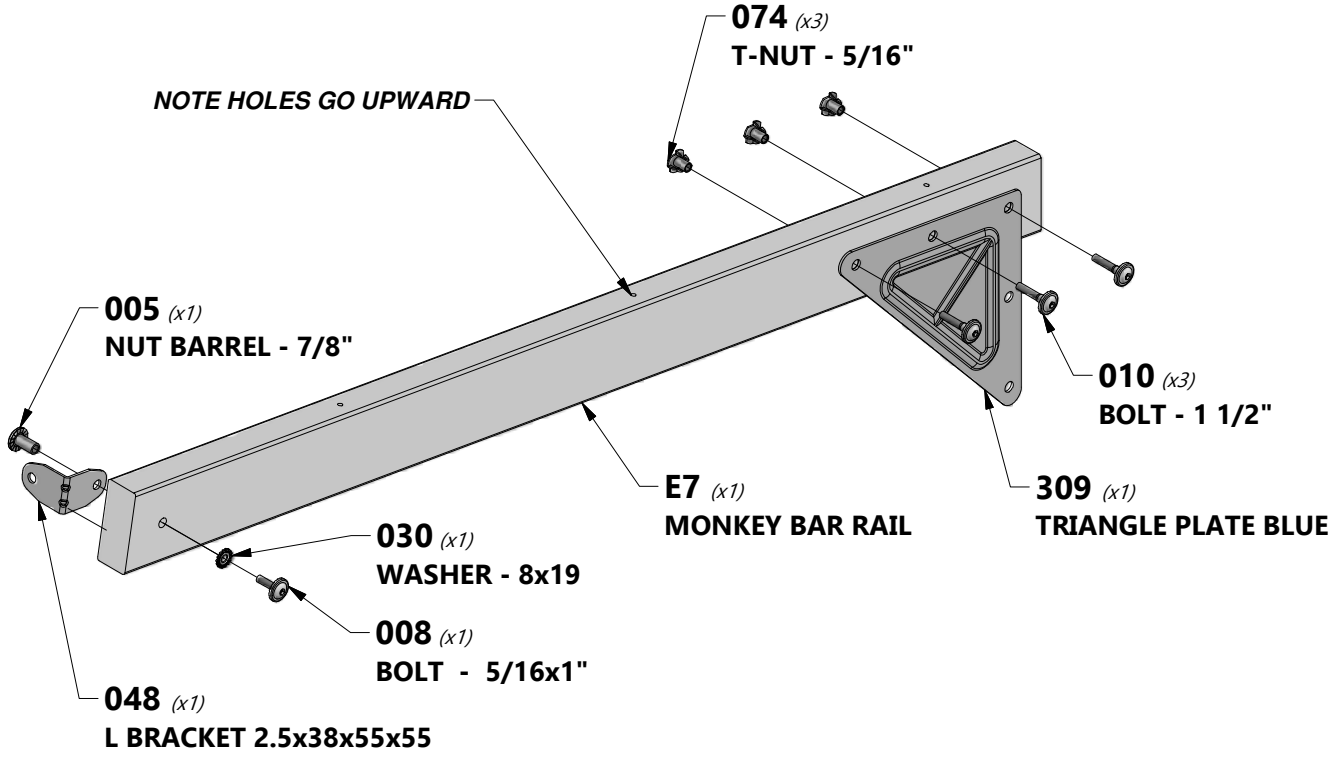

MONKEY BAR

STEP 2

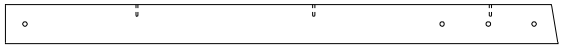

E7 | **MONKEY BAR RAIL - W4L13841**
(1) | *1 3/8"x3 3/8"x48" (36x86x1219)*

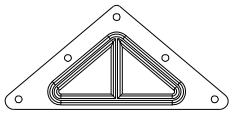

A100309 | **TRIANGLE PLATE BLUE 100 5 HOLE**
(1)

A4M01048 | **L BRACKET 2.5x38x55x55**
(1)

H100010 | **BOLT WH**
(3) | *5/16x1-1/2*

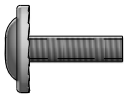

H100008 | **BOLT WH**
(1) | *5/16x1*

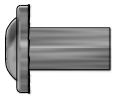

H100005 | **NUT BARREL WH 5/16x7/8**
(1)

H100074 | **T-NUT**
(3) | *5/16*

H100030 | **WASHER LOCK EXT 8x19**
(1)

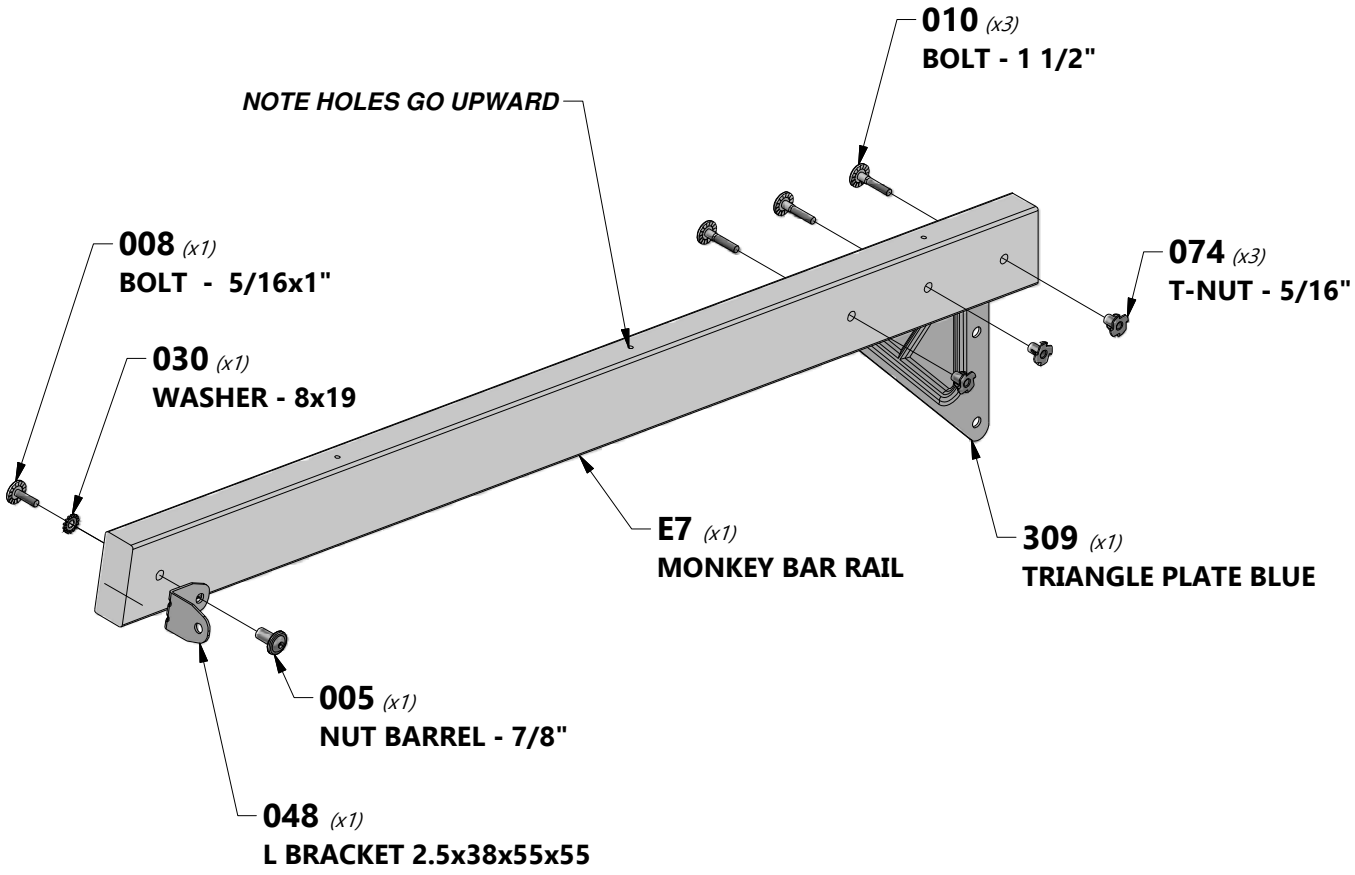

MONKEY BAR

STEP 3

E5 | **MONKEY BAR UPRIGHT - W4L13840**
(1) | *1 3/8"x3 3/8"x70 3/8" (36x86x1786)*

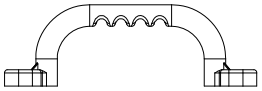

A6P00127 | **HAND GRIP LIME PLASTIC**
(1)

H100010 | **BOLT WH 5/16x1-1/2**
(2)

H100145 | **LAG SCREW WH 1/4x1 1/2**
(2)

H100074 | **T-NUT 5/16**
(2)

H100138 | **WASHER LOCK EXT 6x15**
(2)

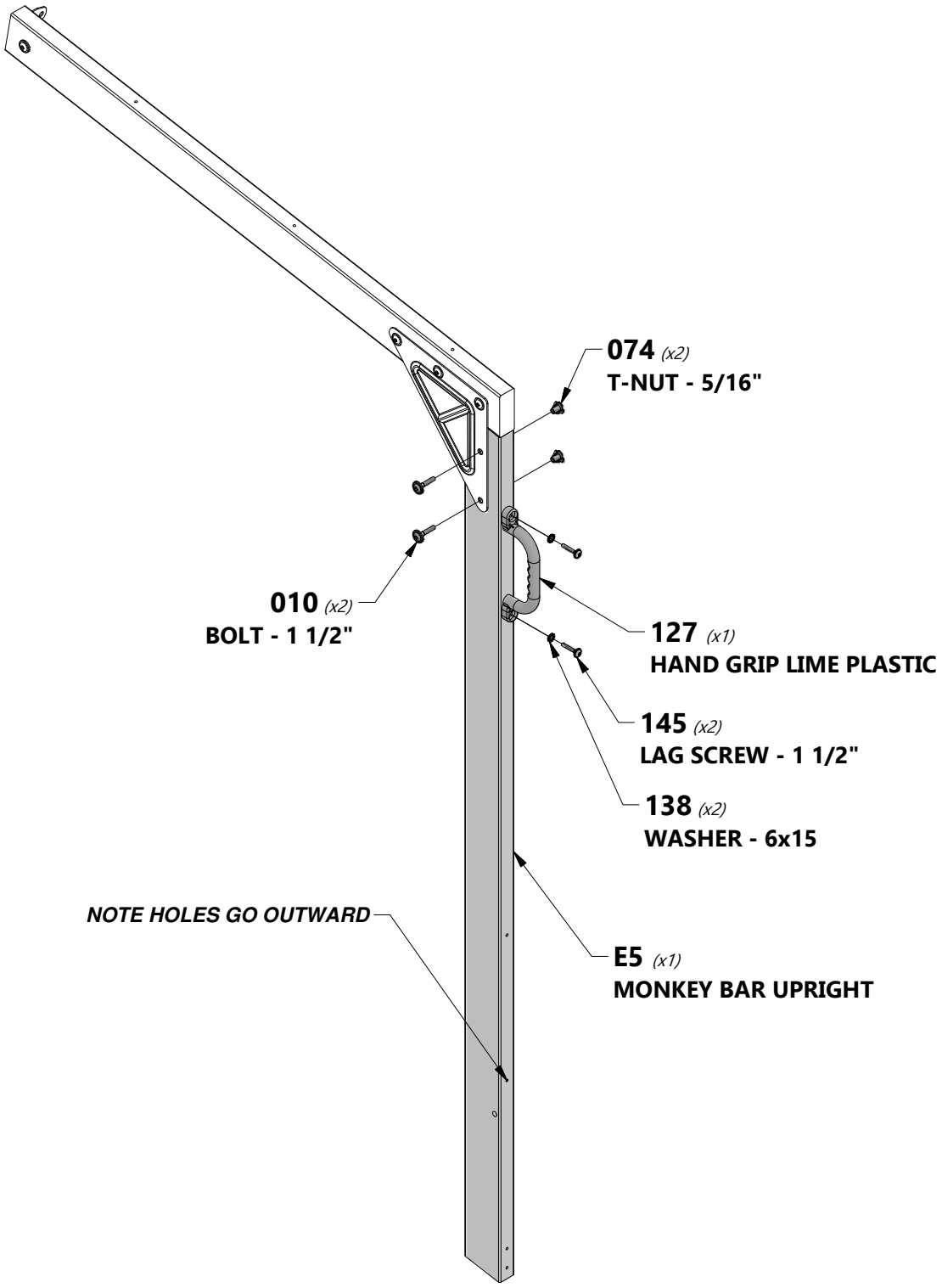

MONKEY BAR

STEP 4

E5 | **MONKEY BAR UPRIGHT - W4L13840**
(1) | *1 3/8"x3 3/8"x70 3/8" (36x86x1786)*

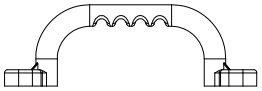

A6P00127 | **HAND GRIP LIME PLASTIC**
(1)

H100010 | **BOLT WH 5/16x1-1/2**
(2)

H100145 | **LAG SCREW WH 1/4x1 1/2**
(2)

H100074 | **T-NUT 5/16**
(2)

H100138 | **WASHER LOCK EXT 6x15**
(2)

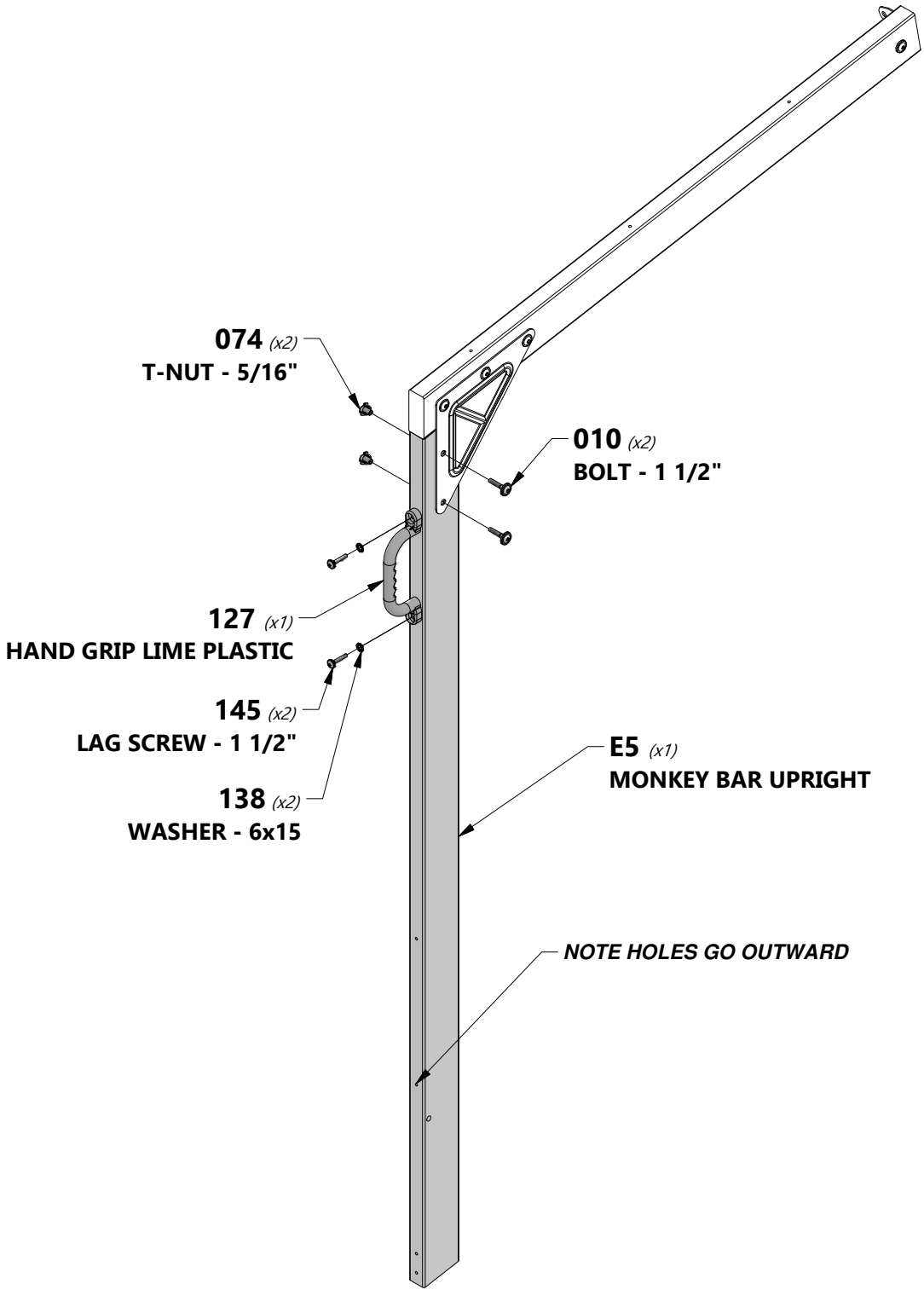

MONKEY BAR

STEP 5

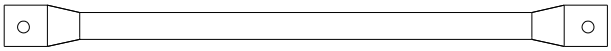

A4M00585 *(5)* | **METAL RUNG 559 BLUE**

H100145 *(10)* | **LAG SCREW WH** *1/4x1 1/2*

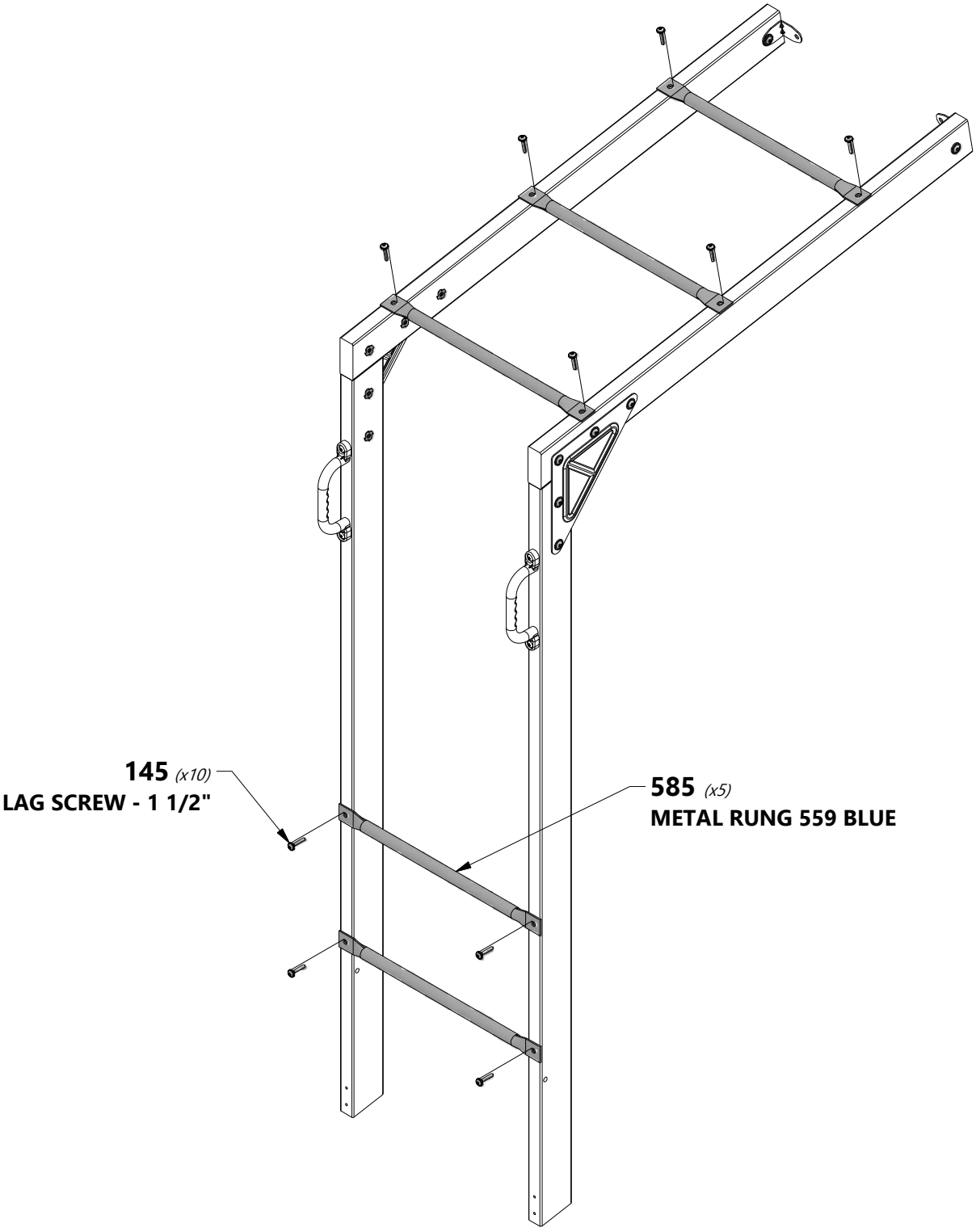

MONKEY BAR

STEP 6

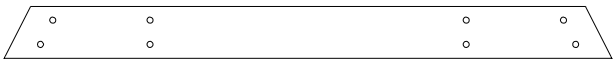

M82 | **MONKEY BAR GROUND BOARD - W4L13850**
(1) | *5/8"x3 3/8"x39 5/8" (16x86x1006)*

H81 | **MONKEY BAR BRACE - W4L13849**
(2) | *1"x3 3/8"x18 5/8" (24x86x474)*

H100047 | **BOLT HEX 5/16x2 3/4**
(2)

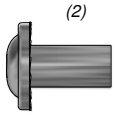

H100005 | **NUT BARREL WH 5/16x7/8**
(4)

H100027 | **LAG SCREW WH 5/16x2**
(4)

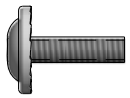

H100008 | **BOLT WH 5/16x1**
(4)

H100108 | **WASHER LOCK INT 8x15**
(2)

H100074 | **T-NUT 5/16**
(2)

H100106 | **WASHER FLAT 9x18**
(2)

H100031 | **WASHER LOCK EXT 12x19**
(4)

H100030 | **WASHER LOCK EXT 8x19**
(8)

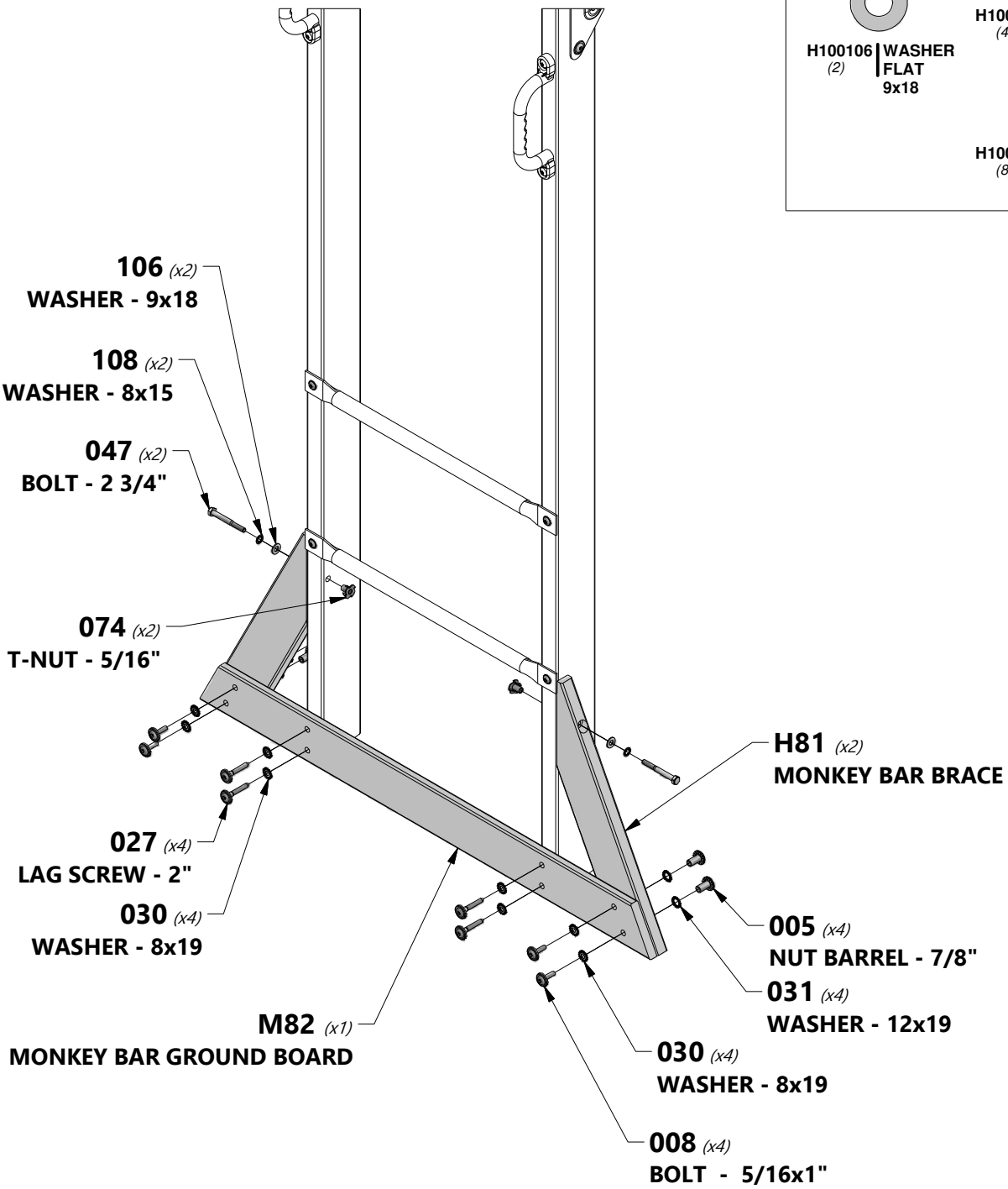

106 *(x2)*
WASHER - 9x18

108 *(x2)*
WASHER - 8x15

047 *(x2)*
BOLT - 2 3/4"

074 *(x2)*
T-NUT - 5/16"

027 *(x4)*
LAG SCREW - 2"

030 *(x4)*
WASHER - 8x19

M82 *(x1)*
MONKEY BAR GROUND BOARD

H81 *(x2)*
MONKEY BAR BRACE

005 *(x4)*
NUT BARREL - 7/8"

031 *(x4)*
WASHER - 12x19

030 *(x4)*
WASHER - 8x19

008 *(x4)*
BOLT - 5/16x1"

BENCH ASSEMBLY

STEP 1

H7 | **BENCH GROUND BOARD - W4L06967**
(2) | *1"x3 3/8"x18 1/8" (24x86x460)*

A4M00646 | **L BRACKET BLUE 32x51**
(2)

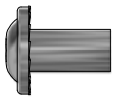

H100005 | **NUT BARREL WH**
(2) | *5/16x7/8*

H100115 | **BOLT WH**
(2) | *5/16x1/2*

H100031 | **WASHER LOCK EXT**
(2) | 12x19

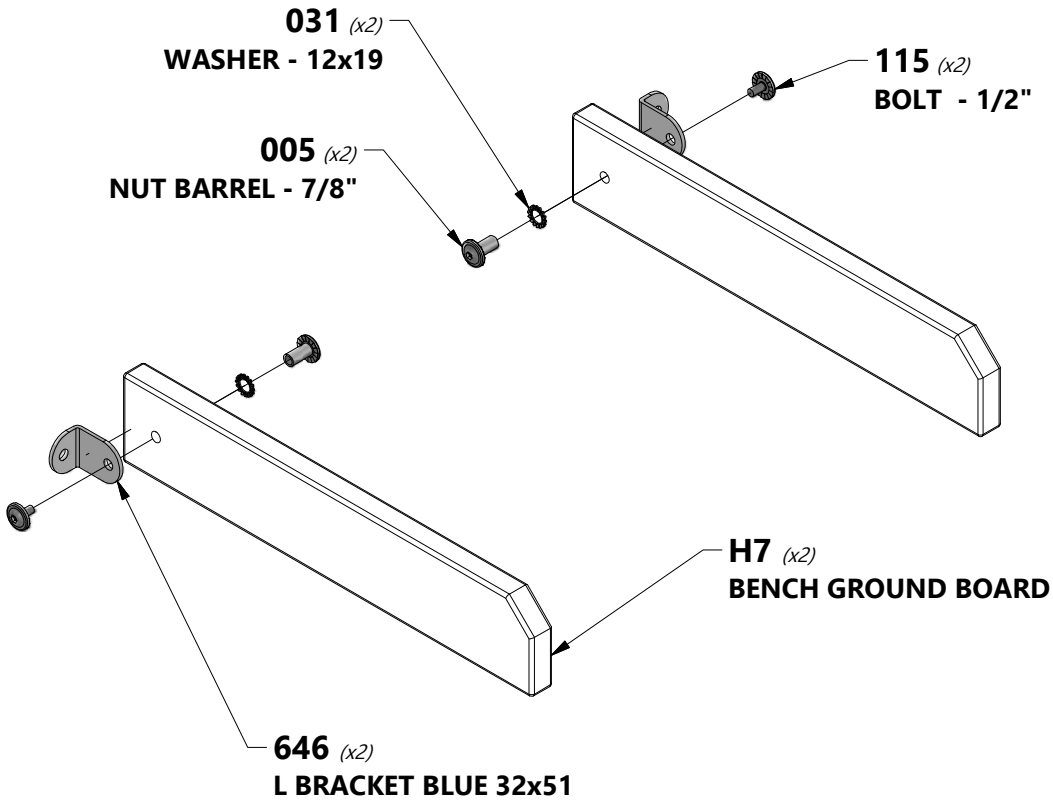

BENCH ASSEMBLY

STEP 2

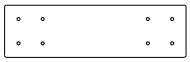

H8 | **BENCH UPRIGHT - W4L06968**
(2) | *1"x3 3/8"x11 3/4" (24x86x300)*

H100089 | **SCREW PFH**
(8) | *8x1 3/4*

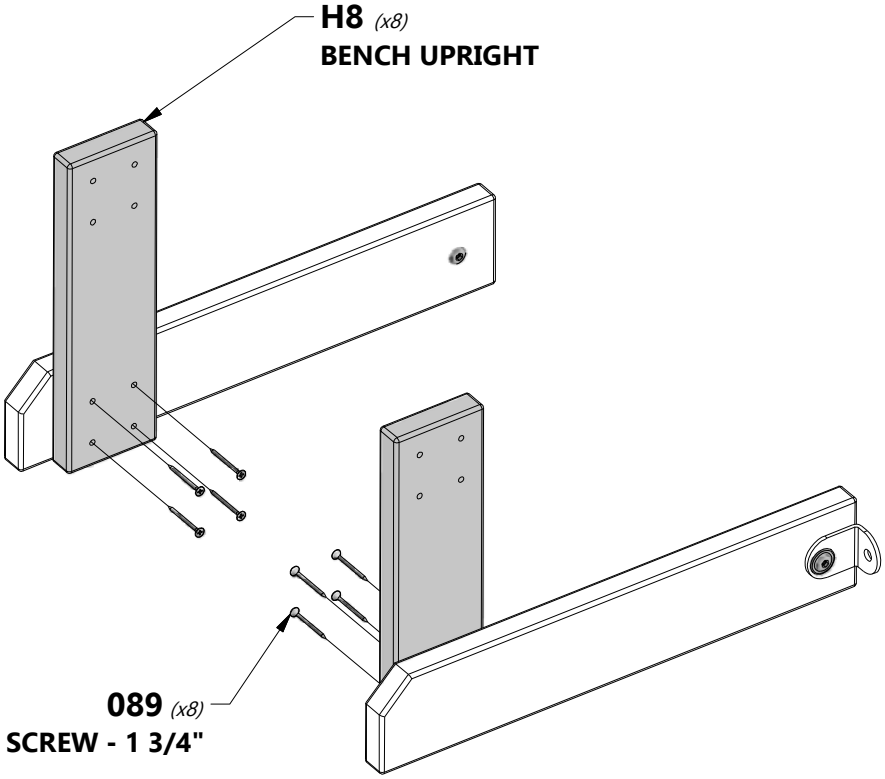

BENCH ASSEMBLY

STEP 3

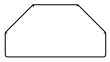

H9 | **BENCH SEAT SUPPORT - W4L06969**
(2) | *1"x3 3/8"x6 1/2" (24x86x166)*

H100089 | **SCREW PFH**
(8) | *8x1 3/4*

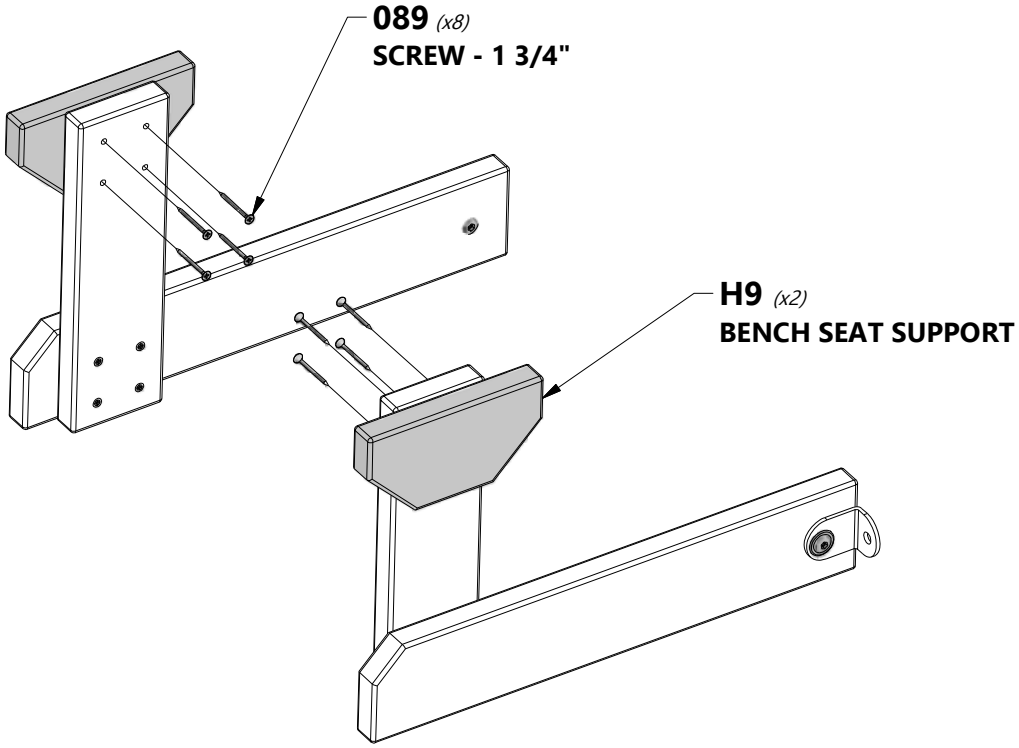

BENCH ASSEMBLY

STEP 4

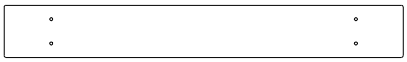

H12 | **BENCH SEAT - W4L13837**
(2) | *1"x3 3/8"x26" (24x86x660)*

H100089 | **SCREW PFH**
(8) | *8x1 3/4*

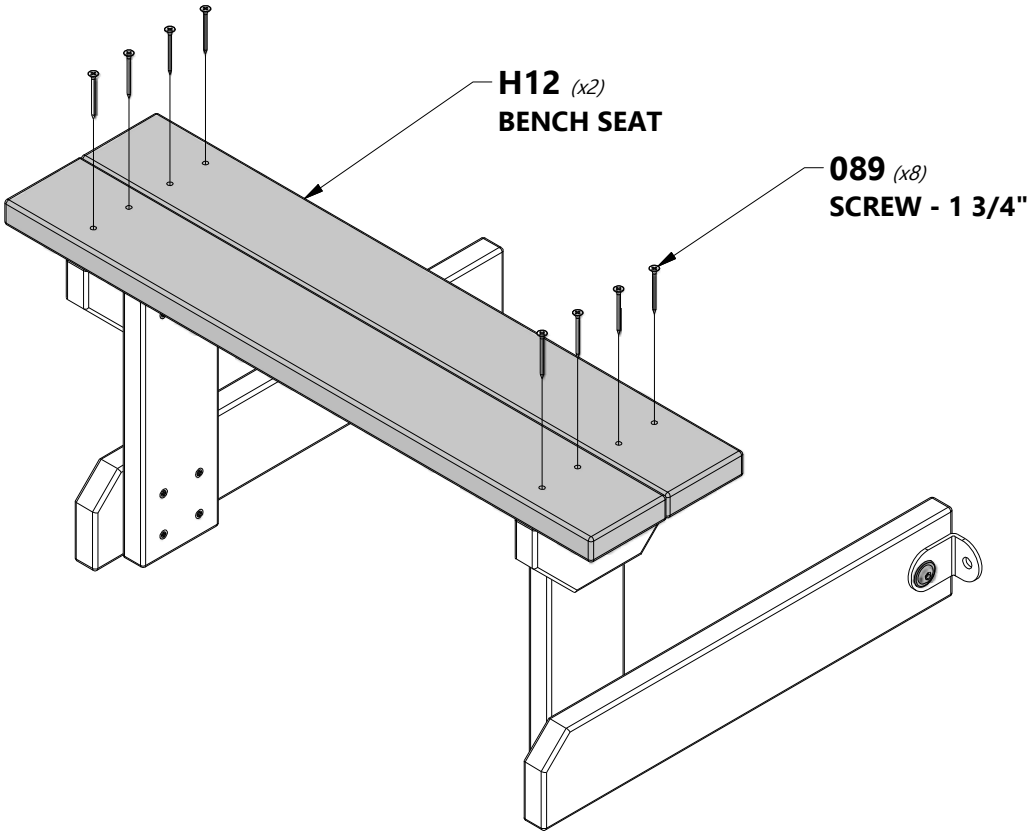

SLIDE ASSEMBLY

STEP 1

A6P00131 *(x1)* | SLIDE BED 8' LIME

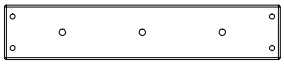

M77 *(x1)* | SLIDE BRACE - W100544 *5/8"x3 3/8"x17 1/4" (16x86x438)*

H100115 *(x3)* | BOLT WH *5/16x1/2*

H100074 *(x3)* | T-NUT *5/16*

NOTE:

PLACE 'M77' SLIDE BRACE BOARD 1/2" FROM THE BOTTOM EDGE OF THE SLIDE BED. USING THE BOARD AS A TEMPLATE, MARK WHERE THE PILOT HOLES WILL BE DRILLED. USE A 3/8" DRILL BIT TO DRILL THE PILOT HOLES INTO THE SLIDE BED. ATTACH THE SLIDE BED SUPPORT BOARD USING THE HARDWARE PROVIDED.

TIP:

PREBENDING THE ENDS WILL EASE ASSEMBLY.

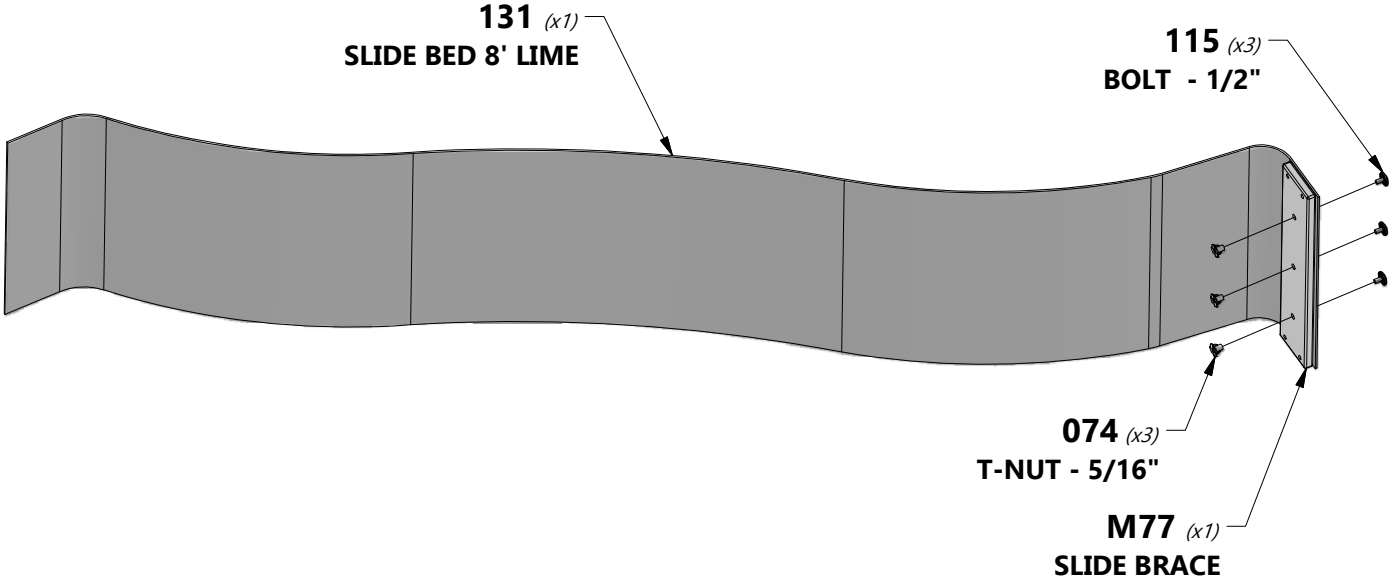

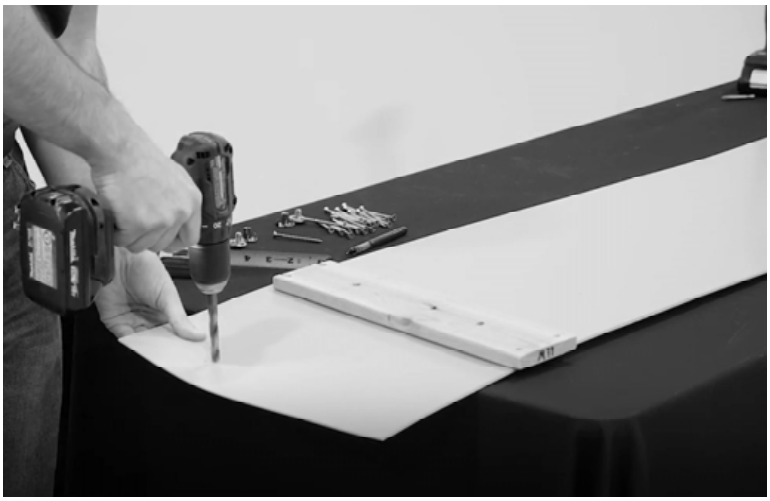

SLIDE ASSEMBLY

STEP 2

M78 *(x2)* | **CENTER SLIDE BRACE - W100545**
5/8"x3 3/8"x17 1/4" (16x86x438)

A100162 *(x1)* | **SLIDE RAIL 8' BLUE LEFT**

A100161 *(x1)* | **SLIDE RAIL 8' BLUE RIGHT**

H100090 *(x24)* | **SCREW PFH**
8x2 1/2"

NOTE:
USING A 1/8" DRILL BIT, DRILL PILOT HOLES IN EACH INDENTATION ALONG EACH SIDE RAIL. THERE SHOULD BE 8 INDENTIONS ON EACH RAIL.

PLACE THE SLIDE RAIL ON FLAT SURFACE. STARTING AT THE BOTTOM, INSERT THE SLIDE BED INTO THE CHANNEL ON THE INSIDE OF THE RAIL. HOLD THE SLIDE BED IN PLACE WHILE A HELPER BENDS THE SLIDE BED INO THE CHANNEL. MAKE SURE THE SLIDE BED IS COMPLETELY INSERTED INTO THE CHANNEL.

INSERT THE CENTER SLIDE BRACE INTO THE RESPECTIVE LOCATION. SECURE THE SLIDE BED AND CENTER USING THE PROVIDED HARDWARE.

REPEAT THIS PROCESS FOR THE OPPOSITE SLIDE RAIL.

TIP:
A HELPER IS REQUIRED FOR THIS STEP.

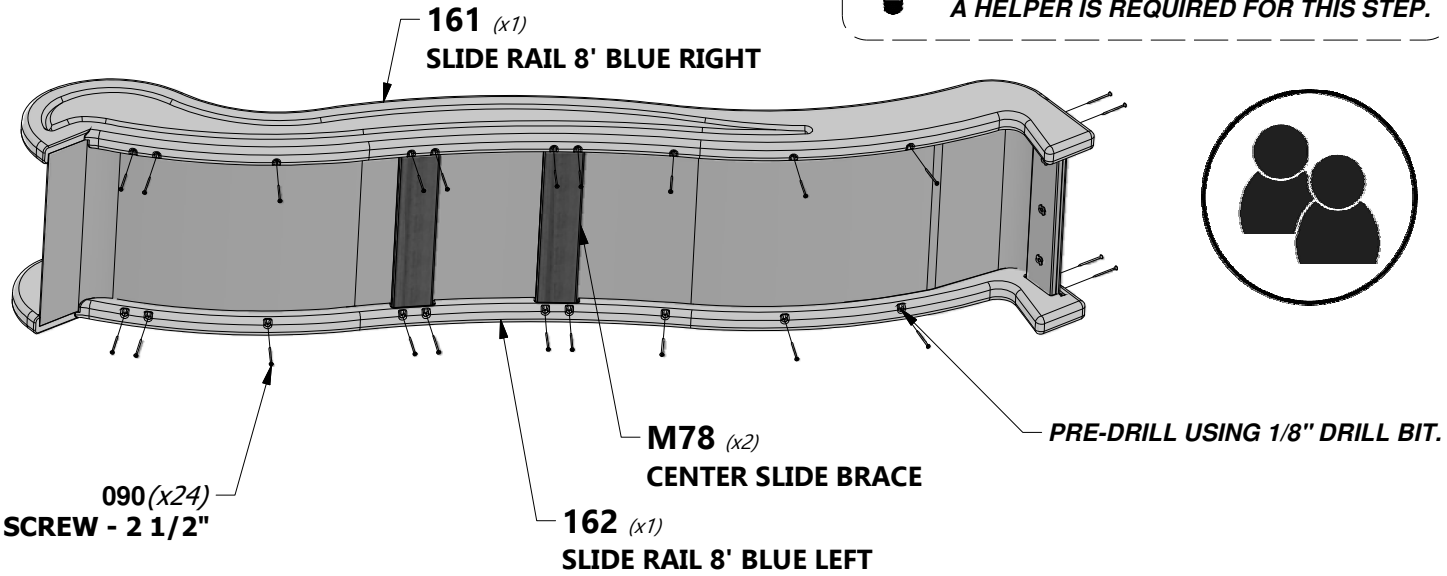

FORT ASSEMBLY

STEP 1

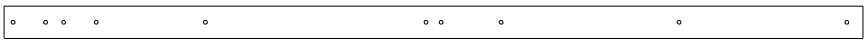

E2 | **UPRIGHT - W4L06891**
(1) | *1 3/8"x3 3/8"x89 1/2" (36x86x2274)*

E3 | **UPRIGHT - W4L06892**
(1) | *1 3/8"x3 3/8"x89 1/2" (36x86x2274)*

K3 | **GROUND BOARD - W4L06896**
(1) | *5/8"x5 1/4"x42 1/8" (16x134x1070)*

M8 | **WALL RAIL - W4L06920**
(1) | *5/8"x3 3/8"x42 1/8" (16x86x1070)*

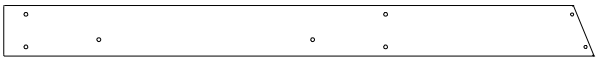

K4 | **GROUND BOARD - W4L13847**
(1) | *5/8"x5 1/4"x61 1/2" (16x134x1564)*

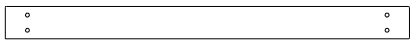

H1 | **FLOOR RAIL - W4L06898**
(1) | *1"x3 3/8"x42 1/8" (24x86x1070)*

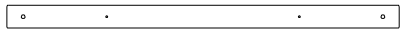

J1 | **WALL RAIL - W4L06900**
(1) | *1"x2 3/8"x40 7/8" (24x60x1038)*

H100013 | **BOLT WH**
(6) | *5/16x2 1/4*

H100074 | **T-NUT**
(18) | 5/16

H100012 | **BOLT WH**
(10) | *5/16x2*

H100030 | **WASHER LOCK EXT**
(16) | 8x19

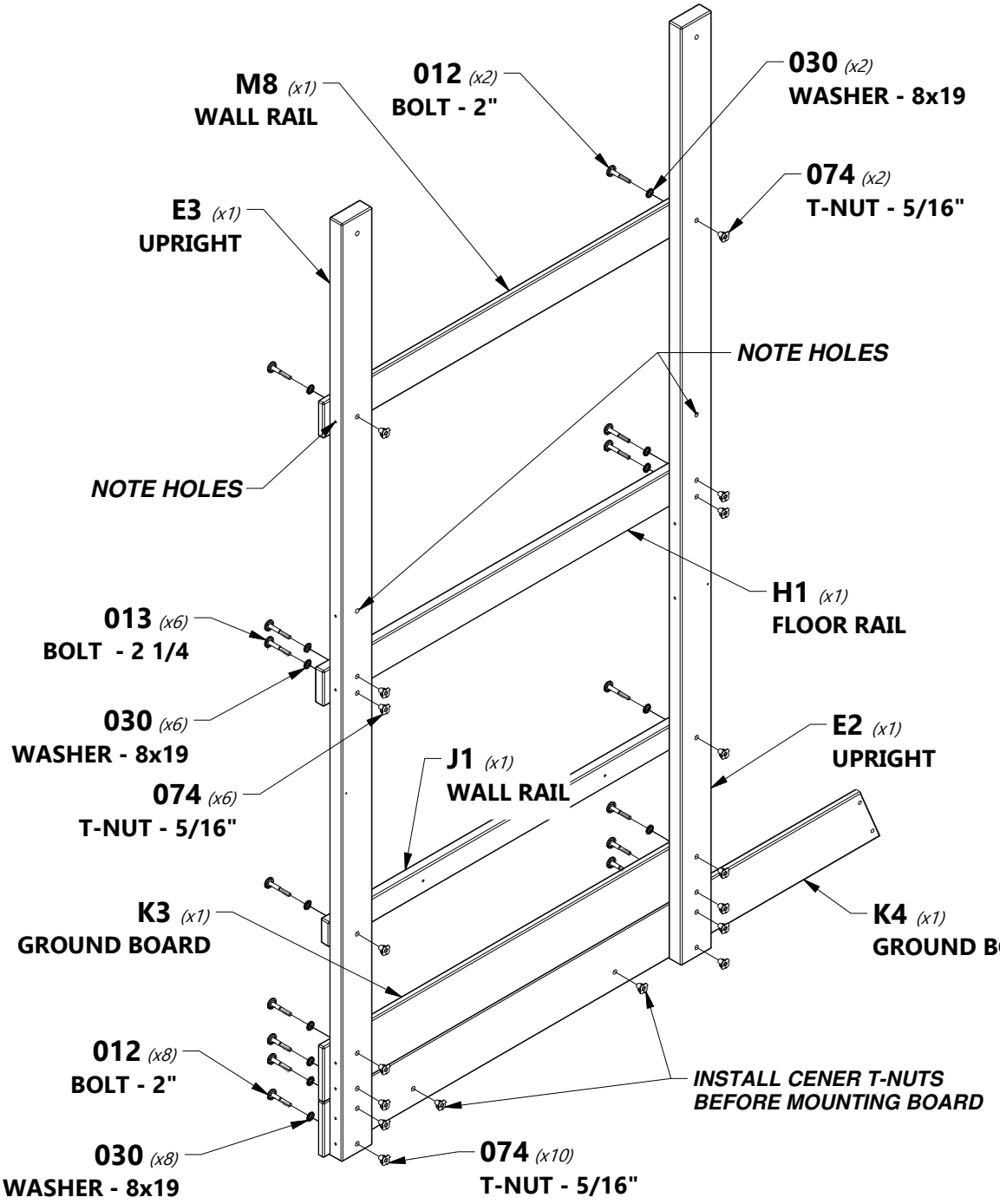

FORT ASSEMBLY

STEP 2

E4 | **UPRIGHT - W2A01970**
(1) | *1 3/8"x3 3/8"x57 3/8" (36x86x2274)*

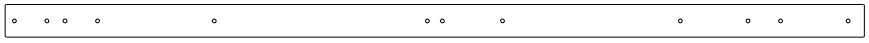

E1 | **UPRIGHT - W4L06890**
(1) | *1 3/8"x3 3/8"x89 1/2" (36x86x2274)*

K1 | **GROUND BOARD - W4L13848**
(1) | *5/8"x5 1/4"x80 3/8" (16x134x2043)*

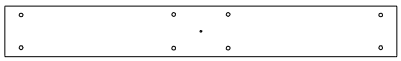

G1 | **SWING BEAM MOUNT - W4L06945**
(1) | *1"x5 1/4"x40 7/8" (24x134x1038)*

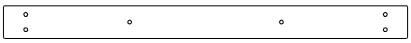

H10 | **FLOR RAIL - W4L07317**
(1) | *1"x3 3/8"x42 1/8" (24x86x1070)*

O3 | **SAFETY BOARD - W4L06948**
(2) | *5/8"x1 3/8"x40 7/8" (16x34x1038)*

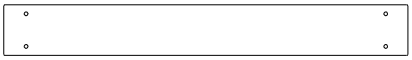

K3 | **GROUND BOARD - W4L06896**
(1) | *5/8"x5 1/4"x42 1/8" (16x134x1070)*

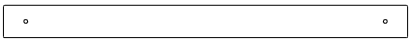

M8 | **WALL RAIL - W4L06920**
(1) | *5/8"x3 3/8"x42 1/8" (16x86x1070)*

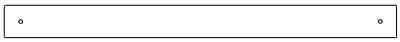

M1 | **SAFETY BOARD - W4L06895**
(1) | *5/8"x3 3/8"x40 7/8" (16x86x1038)*

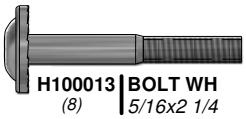

H100013 | **BOLT WH**
(8) | *5/16x2 1/4*

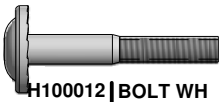

H100012 | **BOLT WH**
(12) | *5/16x2*

H100030 | **WASHER LOCK EXT**
(20) | 8x19

H100074 | **T-NUT**
(24) | *5/16*

H100089 | **SCREW PFH**
(4) | *8x1 3/4*

H100128 | **SCREW PWH**
(2) | *8x5/8*

A100314 | **"A" REVISION TAG**
(1)

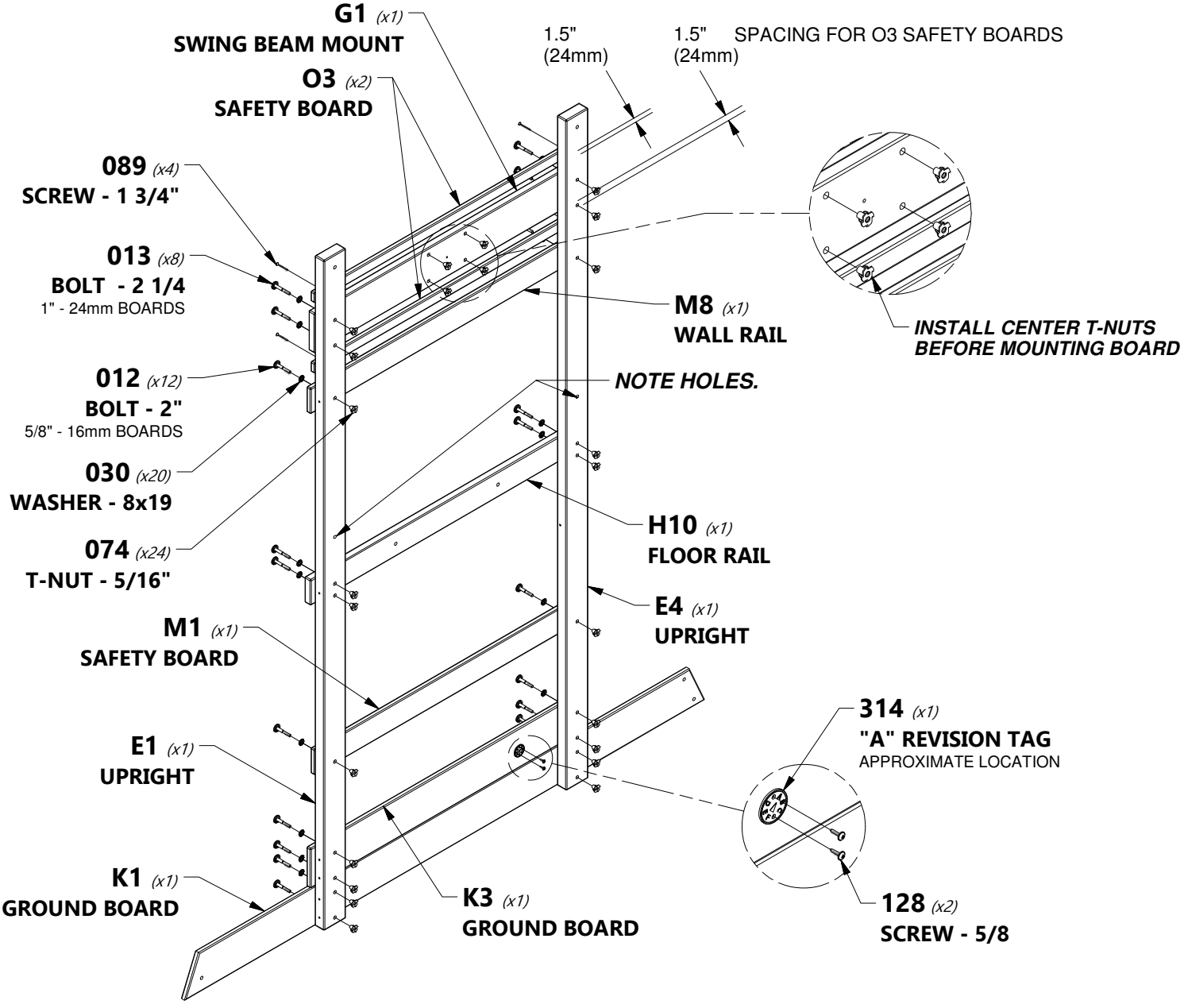

FORT ASSEMBLY

STEP 3

K2 | **GROUND BOARD - W4L06894**
(4) | *5/8"x5 1/4"x43 1/4" (16x134x1097)*

H100026 | **LAG SCREW WH**
(16) | *5/16x1 1/2*

H100030 | **WASHER LOCK EXT**
(16) | 8x19

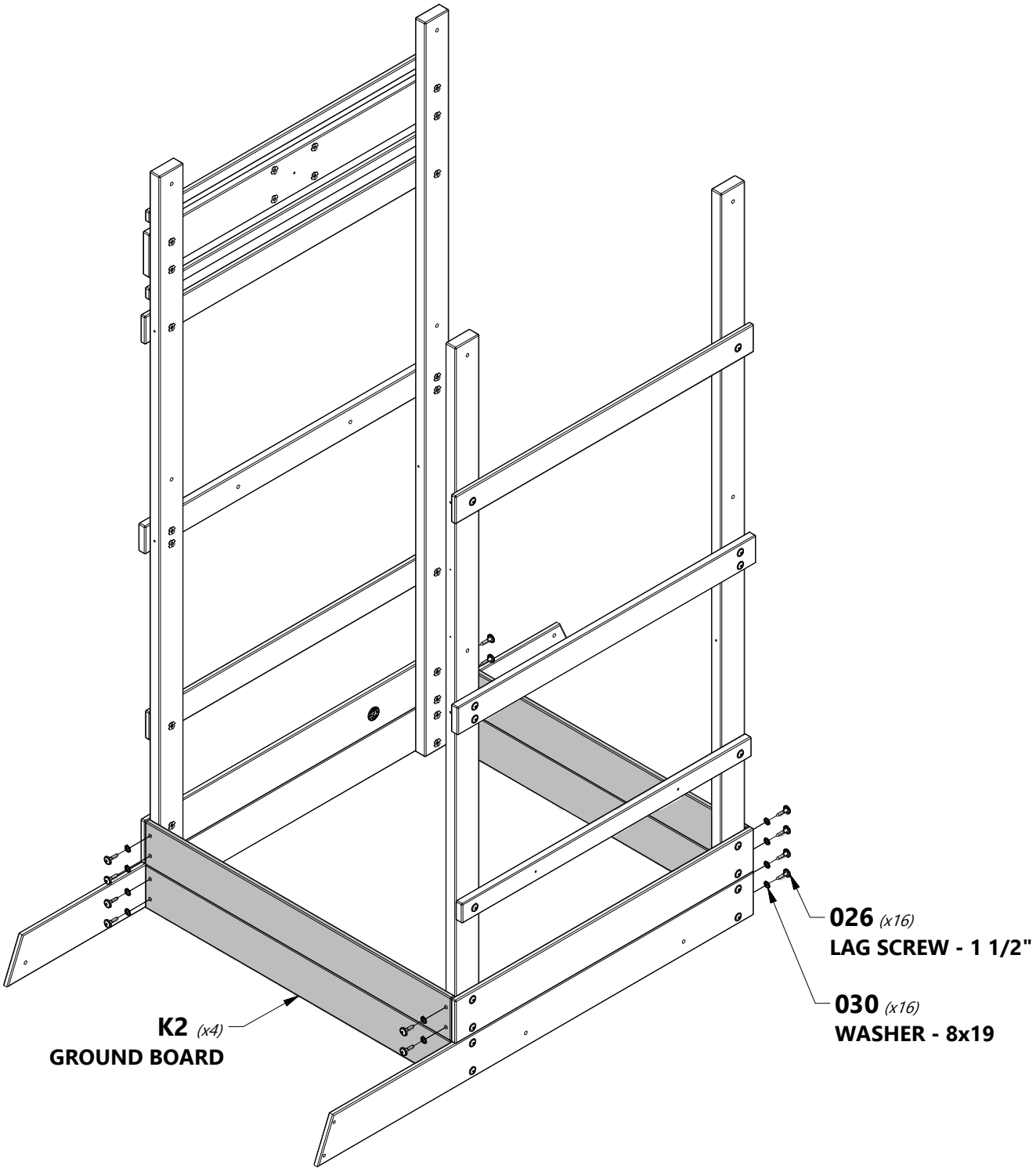

FORT ASSEMBLY

STEP 4

G2 (2) | **SANDBOX SEAT - W4L06433**
1"x5 1/4"x14 5/8" (24x134x370)

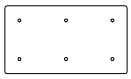

Q2 (4) | **SANDBOX SEAT SUPPORT - W4L06434**
1"x4 3/8"x8" (24x112x202)

H100089 (8) | **SCREW PFH**
8x1 3/4

H100086 (24) | **SCREW PFH**
8x1 1/2

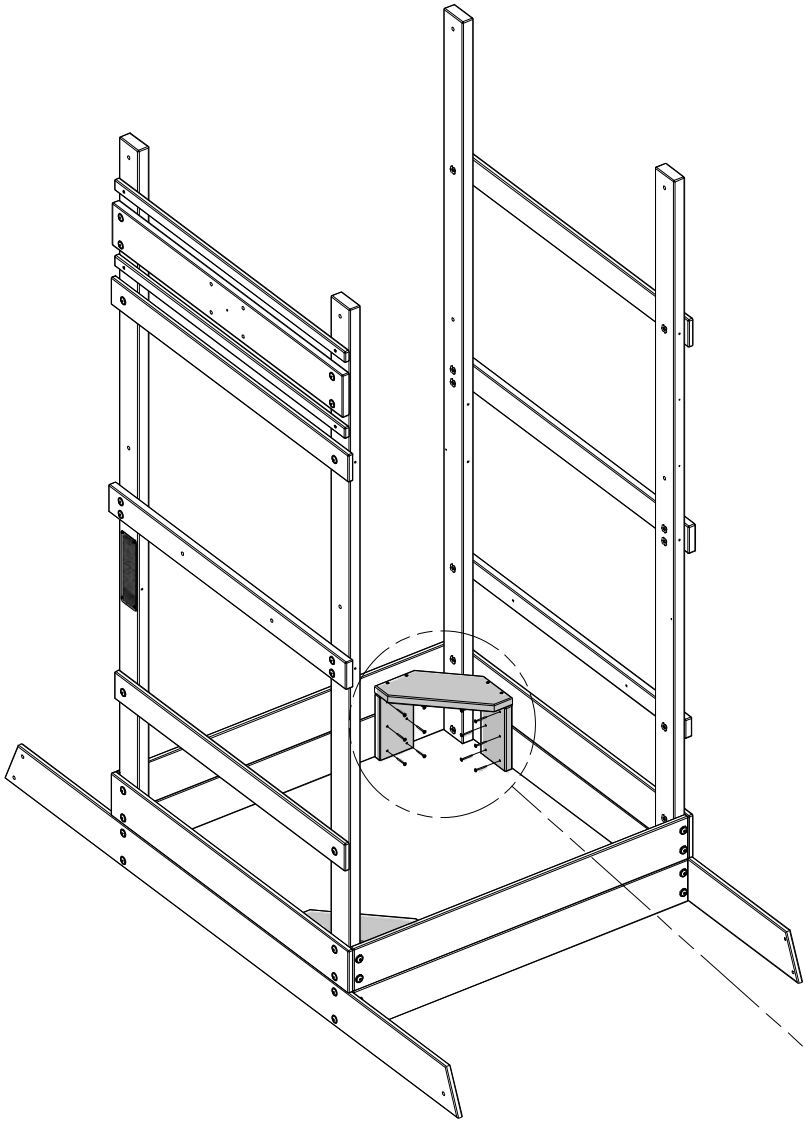

BENCH SUB ASSEMBLY

089 *(x8)*
SCREW - 1 3/4"

G2 *(x2)*
SANDBOX SEAT

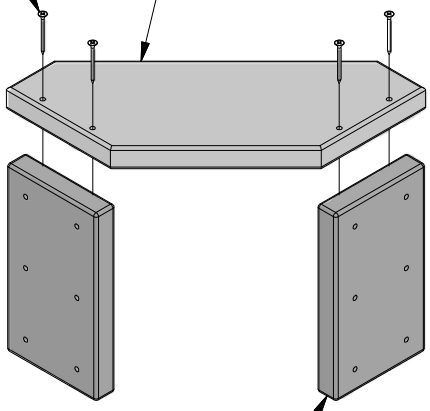

Q2 *(x4)*
SANDBOX SEAT SUPPORT

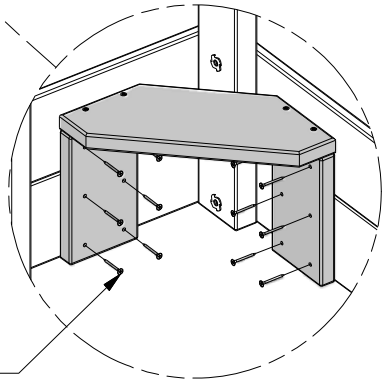

086 *(x24)*
SCREW - 1 1/2"

FORT ASSEMBLY

STEP 5

O1 | **PICKET - W4L06901**
(7) | *5/8"x1 3/8"x13 1/4" (16x34x336)*

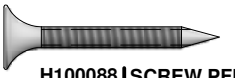

H100088 | **SCREW PFH**
(14) | *8x1 1/8*

FLUSH O1 BOARDS TO TOP OF J1 BOARD. APPROXIMATELY 3 1/8" - 79mm SPACING BETWEEN PICKETS.

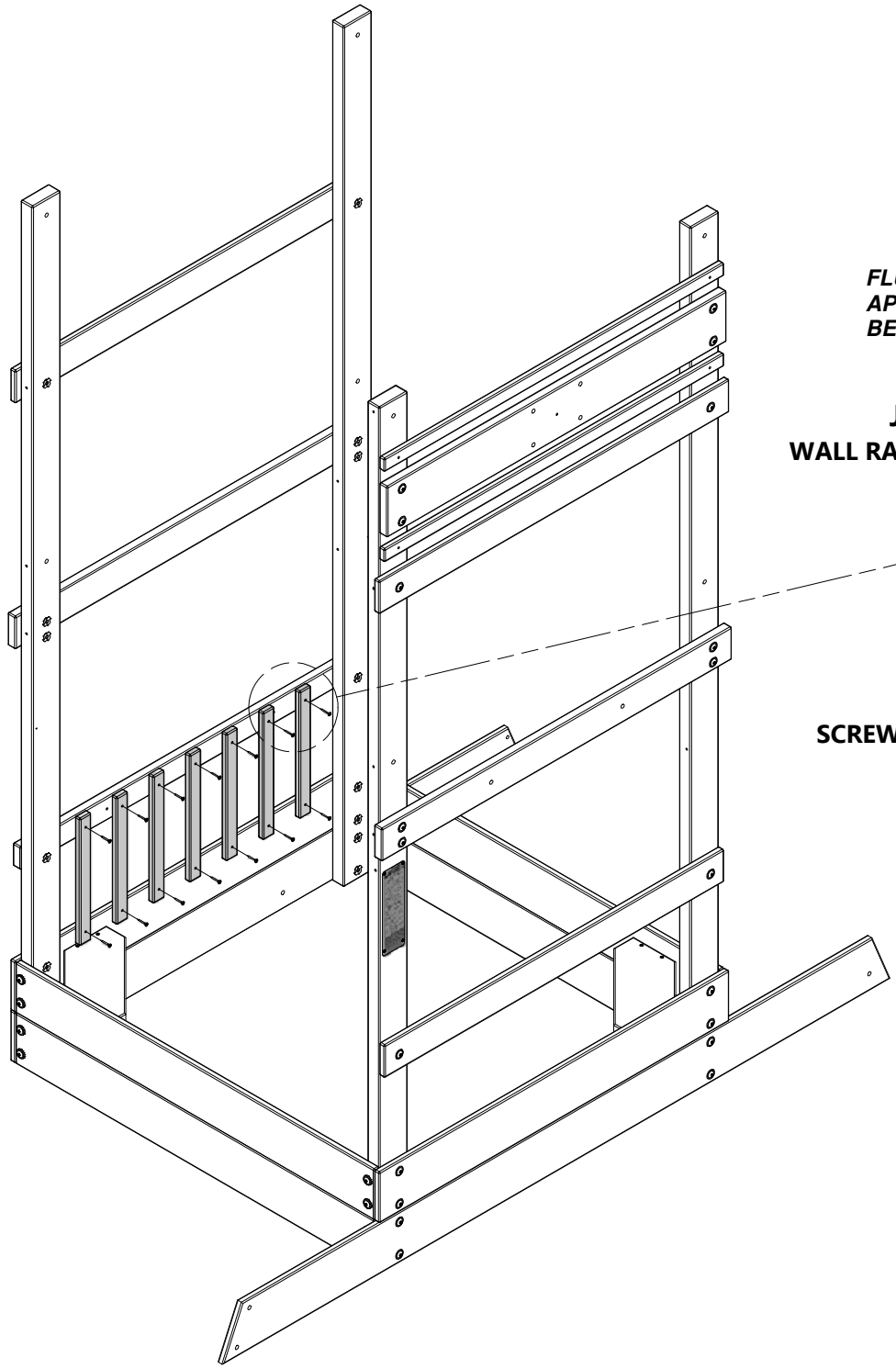

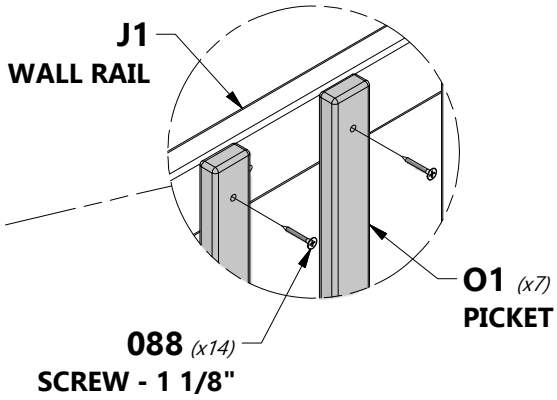

FORT ASSEMBLY

STEP 6

K5 | **SERVING SHELF - W4L06902**
(1) | *5/8"x5 1/4"x40 7/8" (16x134x1038)*

J2 | **SHELF SUPPORT - W4L06903**
(2) | *1"x2 3/8"x2 3/8" (24x60x60)*

H100089 | **SCREW PFH**
(8) | *8x1 3/4*

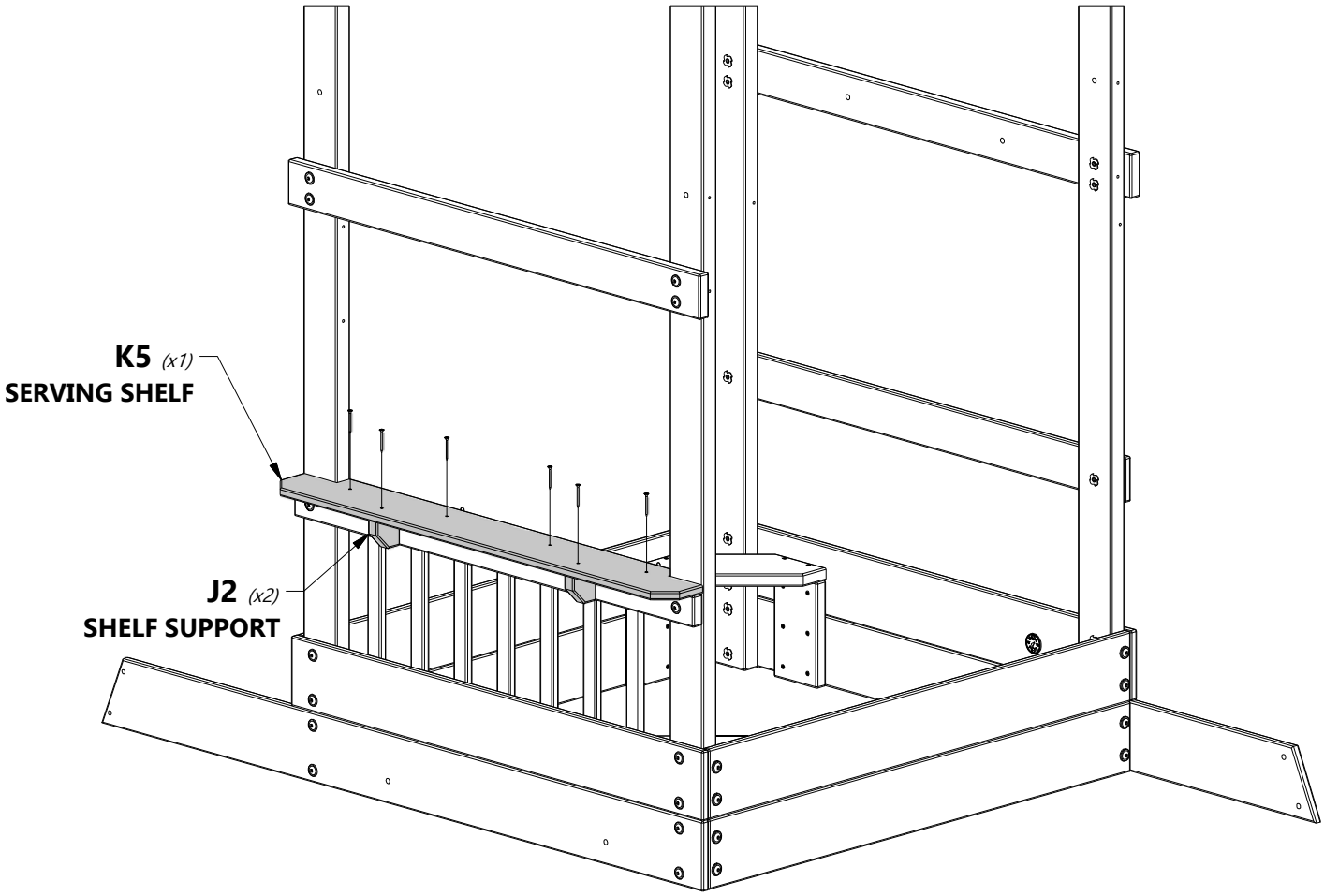

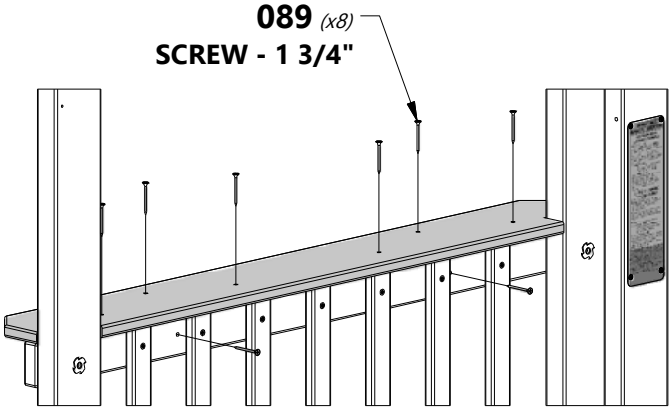

BACK VIEW

FORT ASSEMBLY

STEP 7

J6 | **LADDER RAIL - W4L13845**
(1) | *1"x2 3/8"x50 3/8" (24x60x1279)*

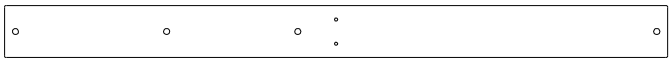

M2 | **FLOOR RAIL - W4L06897**
(1) | *5/8"x3 3/8"x43 1/4" (16x86x1097)*

M5 | **FLOOR RAIL - W4L06914**
(1) | *5/8"x3 3/8"x43 1/4" (16x86x1097)*

H100027 | **LAG SCREW WH**
(1) | *5/16x2*

H100026 | **LAG SCREW WH**
(3) | *5/16x1 1/2*

H100145 | **LAG SCREW WH**
(2) | *1/4x1 1/2*

H100030 | **WASHER LOCK EXT**
(4) | 8x19

H100138 | **WASHER LOCK EXT**
(2) | 6x15

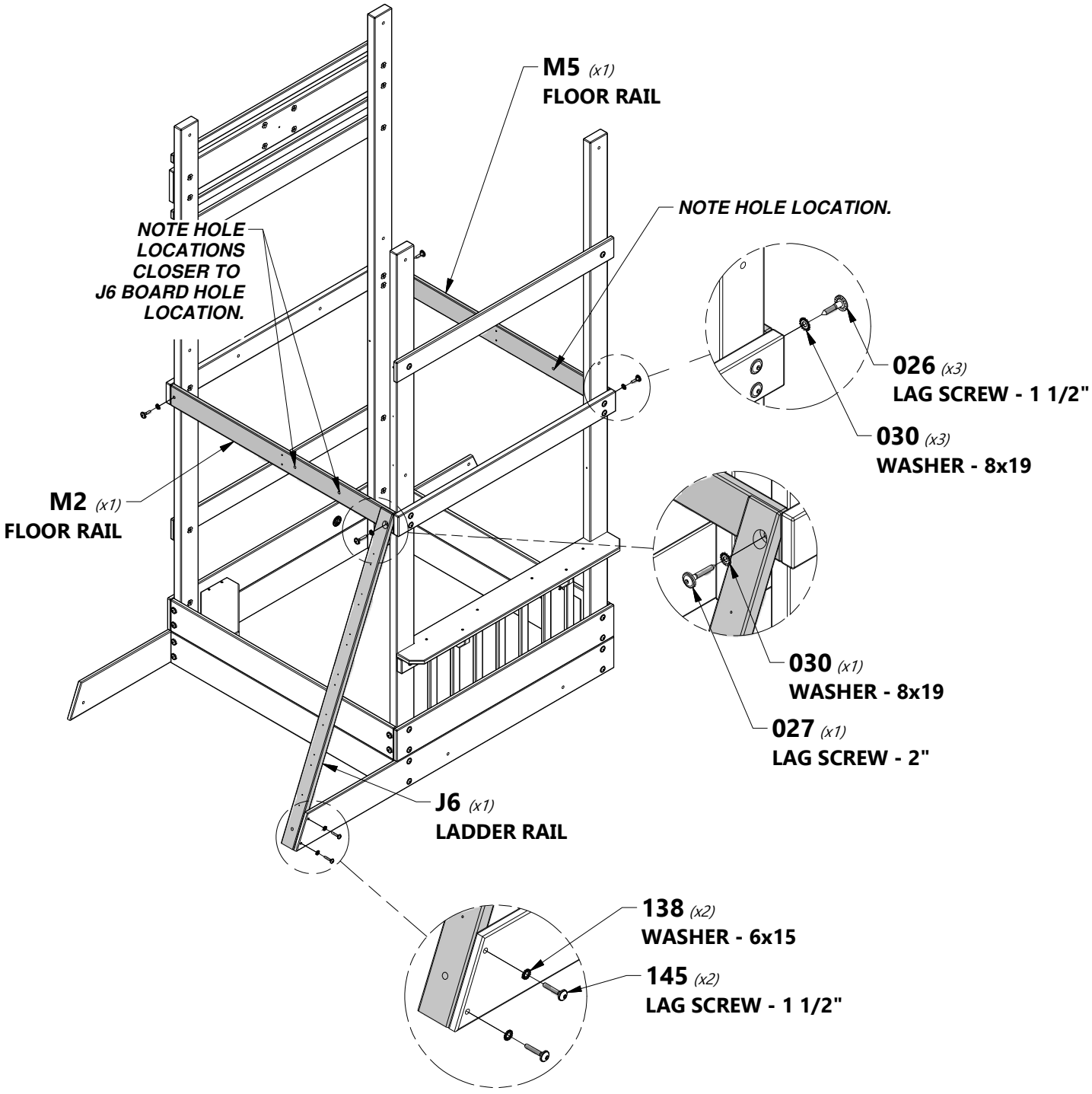

FORT ASSEMBLY

STEP 8

H2 (4) | **DECK BRACE - W4L06909**
1"x3 3/8"x18 3/4" (24x86x475)

H100011 (2) | **BOLT WH** *5/16x1 3/4*

H100010 (2) | **BOLT WH** *5/16x1-1/2*

H100145 (4) | **LAG SCREW WH** *1/4x1 1/2*

H100138 (4) | **WASHER LOCK EXT** 6x15

H100030 (4) | **WASHER LOCK EXT** 8x19

H100074 (5) | **T-NUT** *5/16*

SQUARE WHEN PUTTING ON H2 BOARDS.

030 *(x2)*
WASHER - 8x19

011 *(x2)*
BOLT - 1 3/4"

H2 *(x1)*
DECK BRACE

074 *(x2)*
T-NUT - 5/16"

H2 *(x1)*
DECK BRACE

138 *(x4)*
WASHER - 6x15

145 *(x4)*
LAG SCREW - 1 1/2"

H2 *(x1)*
DECK BRACE

INSTALL T-NUT BEFORE MOUNTING BOARD.

H2 *(x1)*
DECK BRACE

074 *(x3)*
T-NUT - 5/16"

010 *(x2)*
BOLT - 1 1/2"

030 *(x2)*
WASHER - 8x19

FORT ASSEMBLY

STEP 9

J3 | **ANGLE BRACE - W4L06905**
(1) | *1"x2 3/8"x47 1/4" (24x60x1200)*

H100010 | **BOLT WH**
(2) | *5/16x1-1/2*

H100145 | **LAG SCREW WH**
(1) | *1/4x1 1/2*

H100138 | **WASHER LOCK EXT**
(1) | 6x15

H100030 | **WASHER LOCK EXT**
(2) | 8x19

H100074 | **T-NUT**
(2) | *5/16*

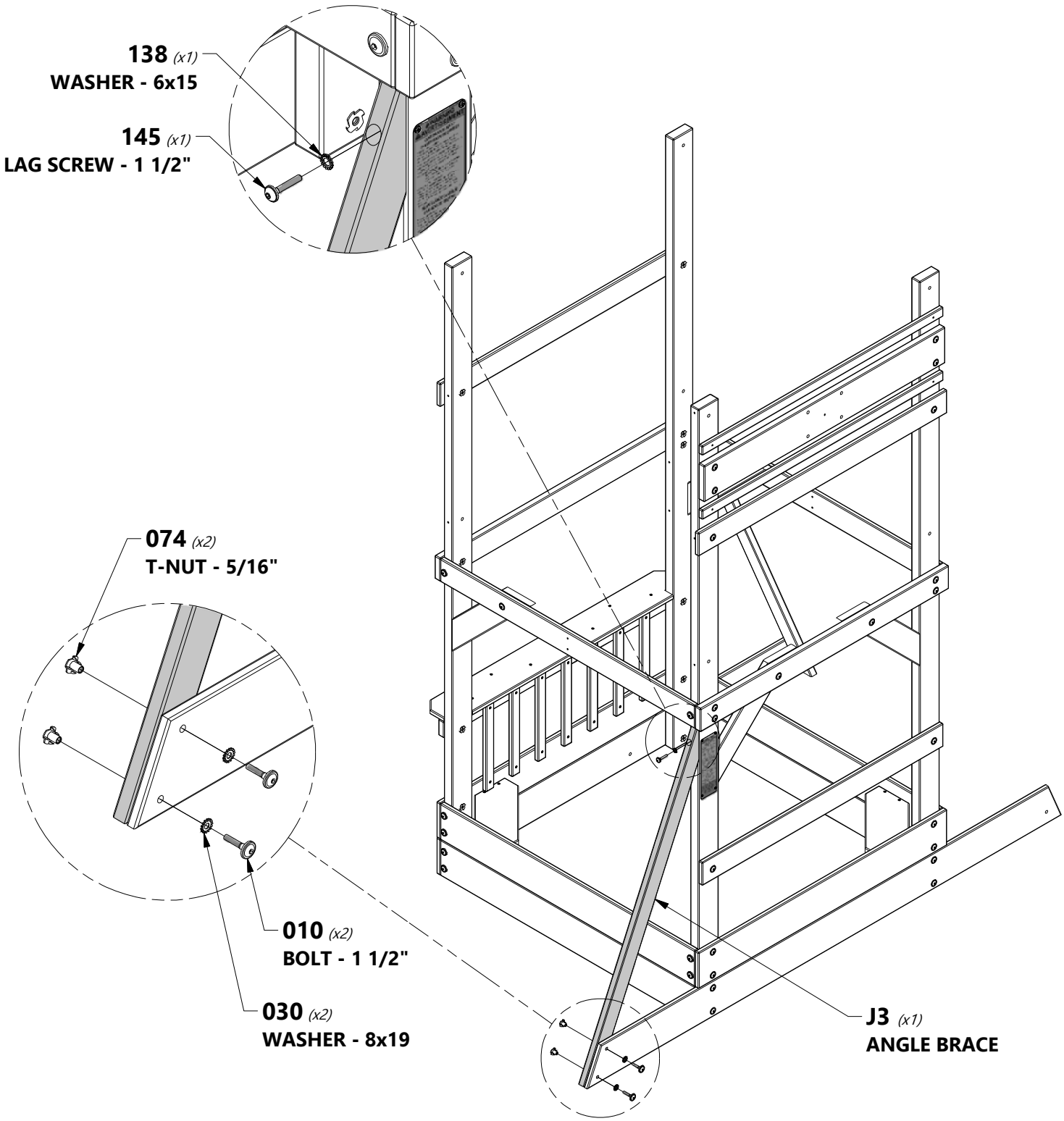

FORT ASSEMBLY

STEP 10

J9 | **SUPPORT BOARD - W4L06064**
(4) | *1"x2 3/8"x3" (24x60x76)*

H100089 | **SCREW PFH**
(8) | *8x1 3/4*

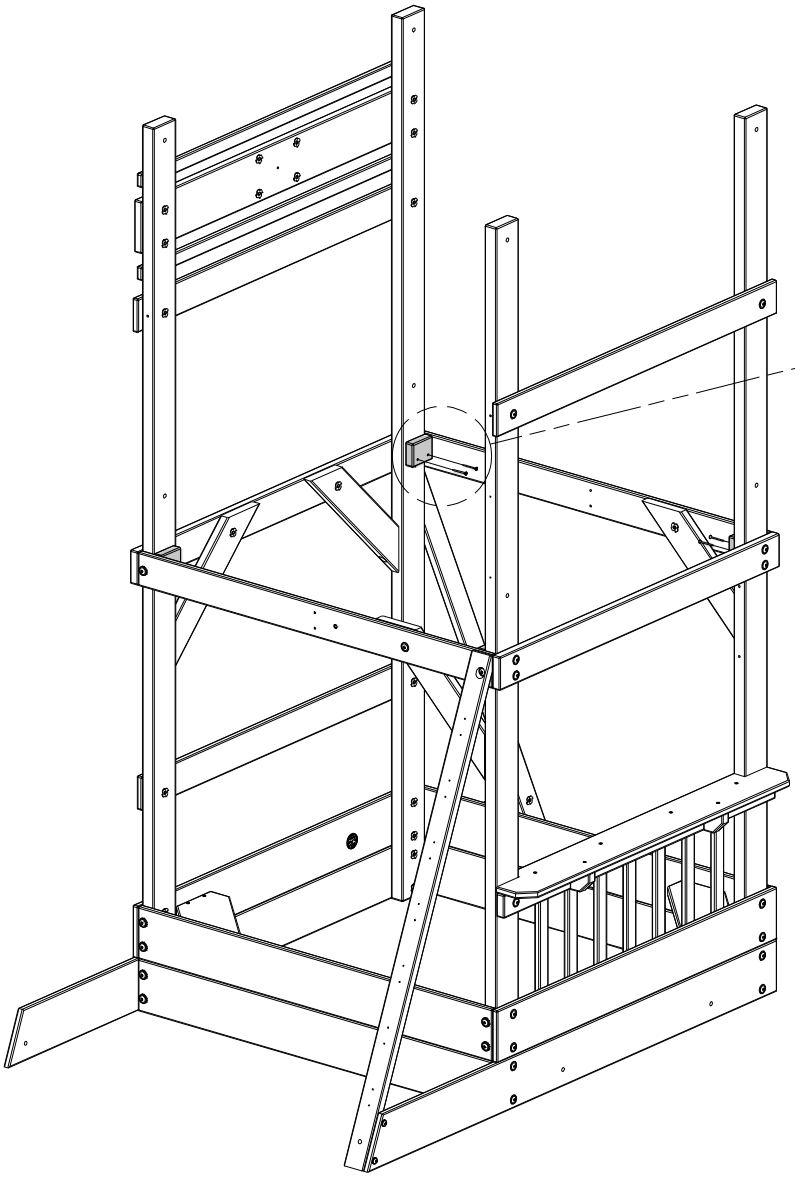

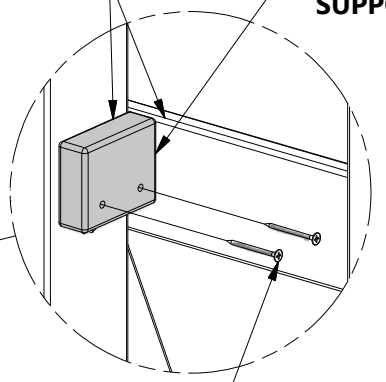

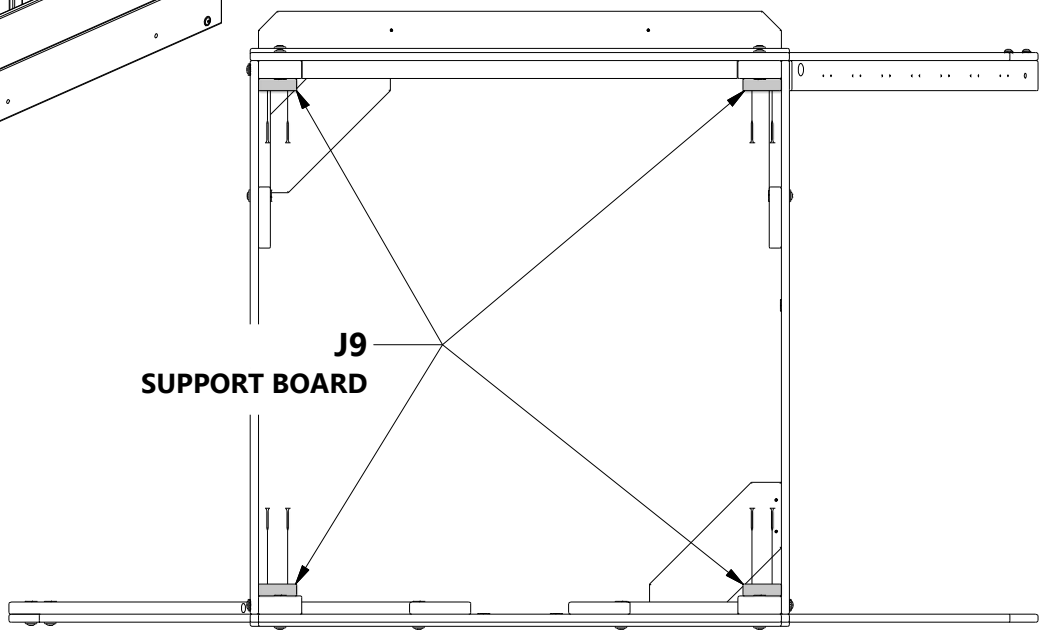

FORT ASSEMBLY

STEP 11

H3 | **FLOOR SUPPORT - W4L06915**
(1) | *1"x3 3/8"x40 7/8" (24x86x1038)*

H100111 | **SCREW PFH**
(4) | *8x2*

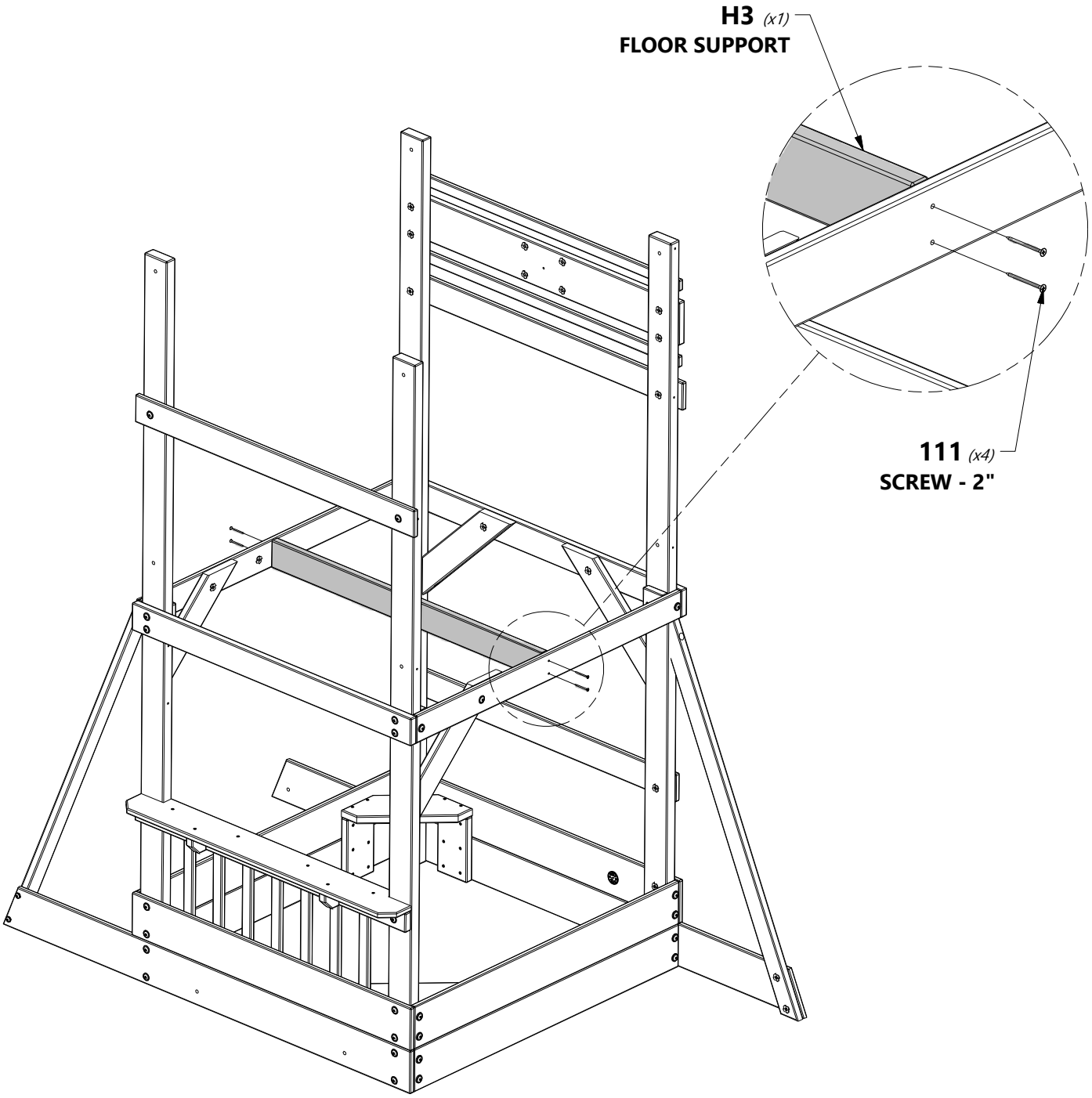

FORT ASSEMBLY

STEP 12

J5 | **AWNING SUPPORT - W4L06908**
(2) | *1"x2 3/8"x11 3/4" (24x60x298)*

H100027 | **LAG SCREW WH**
(2) | *5/16x2*

H100030 | **WASHER LOCK EXT**
(2) 8x19

J5 *(x2)*
AWNING SUPPORT

030 *(x2)*
WASHER - 8x19

027 *(x2)*
LAG SCREW - 2"

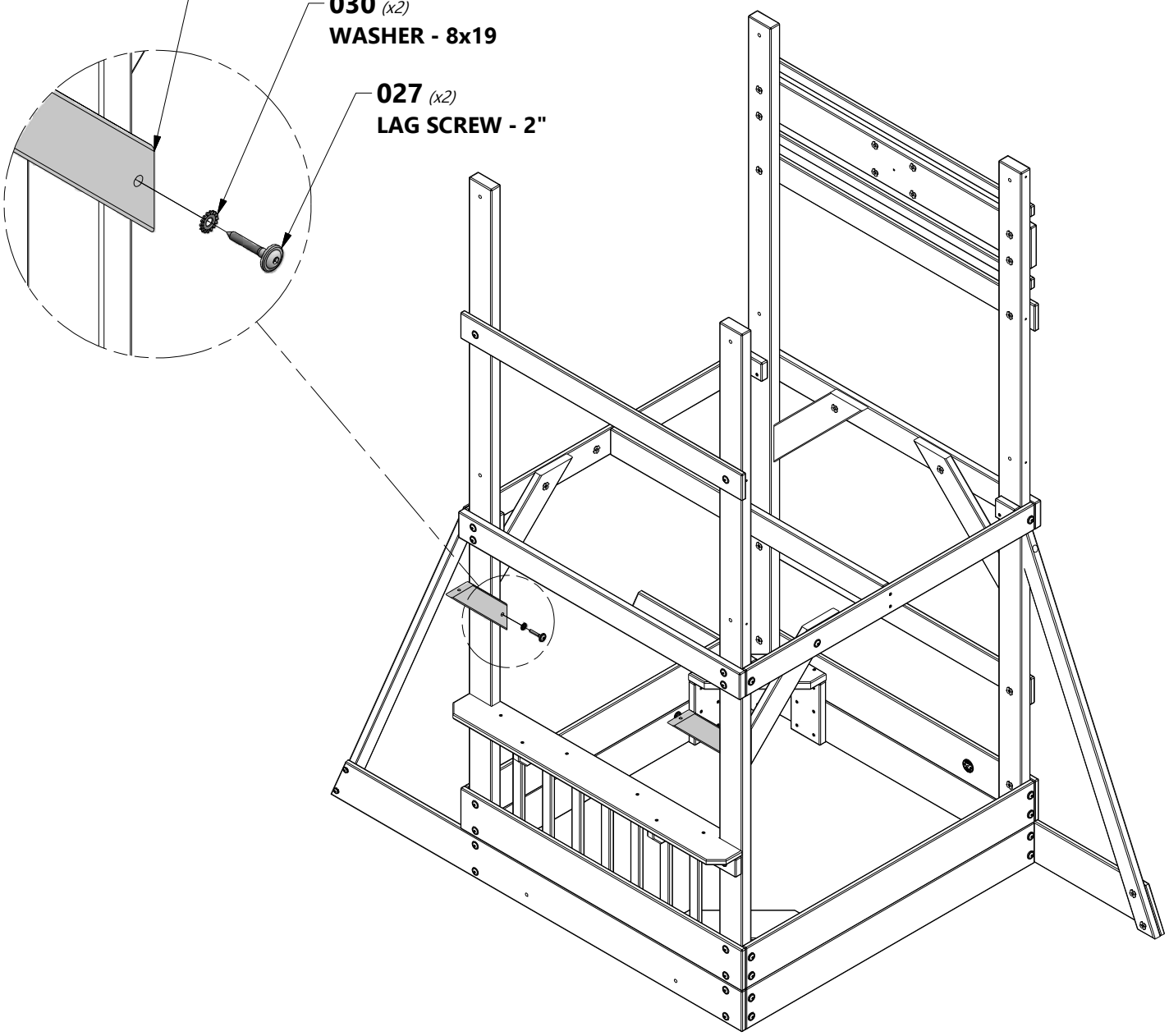

FORT ASSEMBLY

STEP 13

N1 | **AWNING BOARD - W4L06907**
(1) | *5/8"x2 3/8"x34 1/8" (16x60x866)*

J4 | **AWNING BOARD - W4L06906**
(2) | *1"x2 3/8"x14 1/8" (24x60x358)*

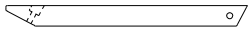

T2 | **SAFETY BOARD - W4L13853**
(2) | *1"x1 3/8"x15 3/4" (24x34x400)*

H100027 | **LAG SCREW WH** 5/16x2
(4)

H100145 | **LAG SCREW WH** 1/4x1 1/2
(4)

H100089 | **SCREW PFH** 8x1 3/4
(4)

H100138 | **WASHER LOCK EXT** 6x15
(4)

H100030 | **WASHER LOCK EXT** 8x19
(4)

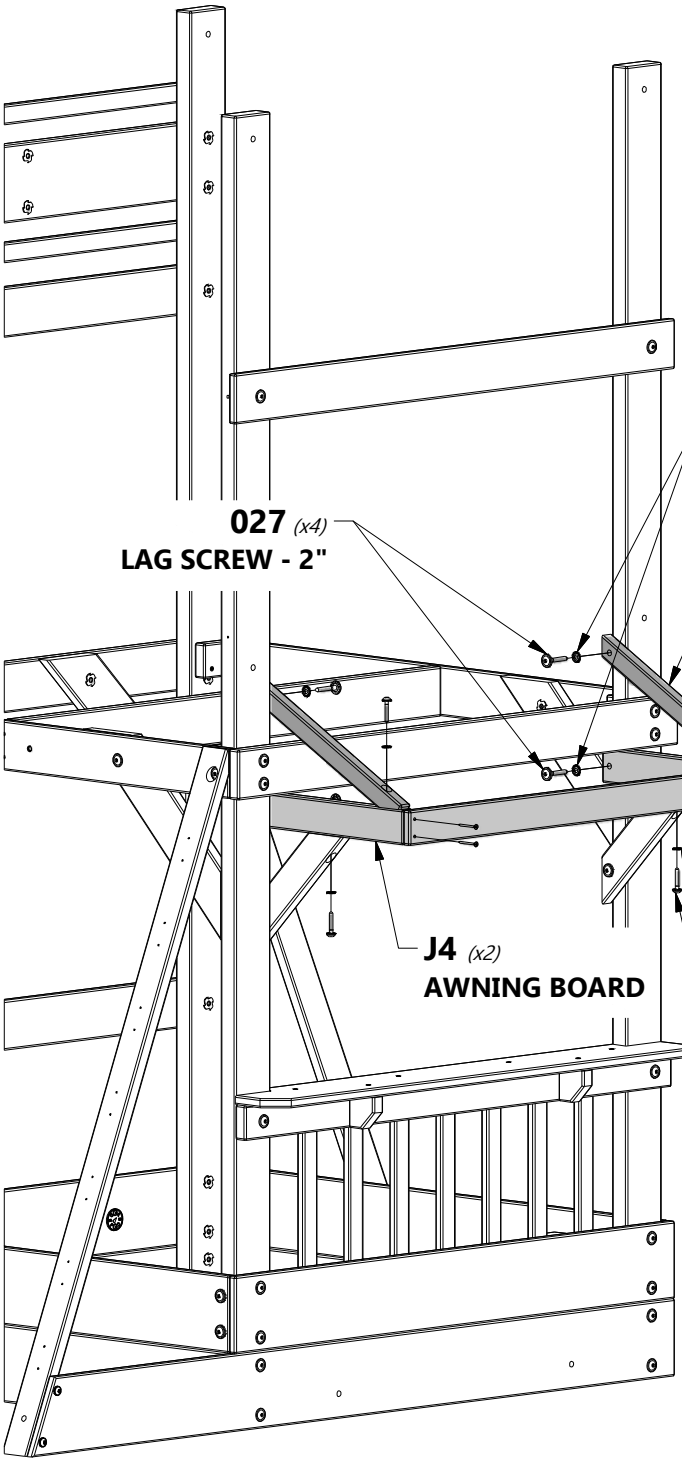

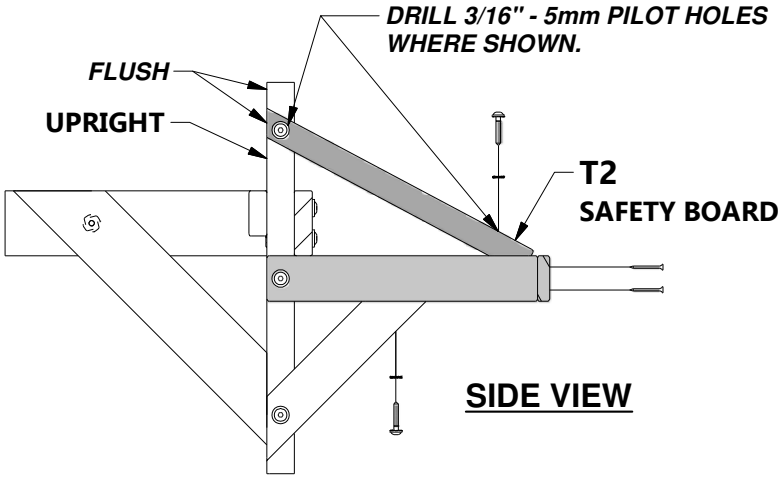

030 *(x4)*
WASHER - 8x19

027 *(x4)*
LAG SCREW - 2"

T2 *(x2)*
SAFETY BOARD

145 *(x2)*
LAG SCREW - 1 1/2"

138 *(x2)*
WASHER - 6x15

089 *(x4)*
SCREW - 1 3/4"

J4 *(x2)*
AWNING BOARD

N1 *(x1)*
AWNING BOARD

138 *(x2)*
WASHER - 6x15

145 *(x2)*
LAG SCREW - 1 1/2"

FORT ASSEMBLY

STEP 14

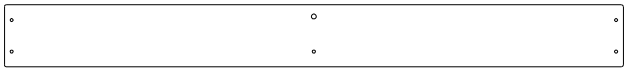

Y1 | **FLOOR BOARD - W4L13851**
(1) | *5/8"x4"x40 3/8" (16x102x1024)*

Y2 | **FLOOR BOARD - W4L06917**
(1) | *5/8"x4"x40 3/8" (16x102x1024)*

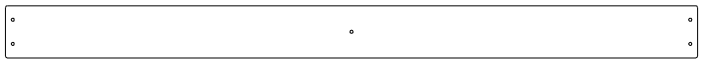

M6 | **FLOOR BOARD - W4L06918**
(10) | *5/8"x3 3/8"x45 1/8" (16x86x1145)*

H100086 | **SCREW PFH**
(60) | *8x1 1/2*

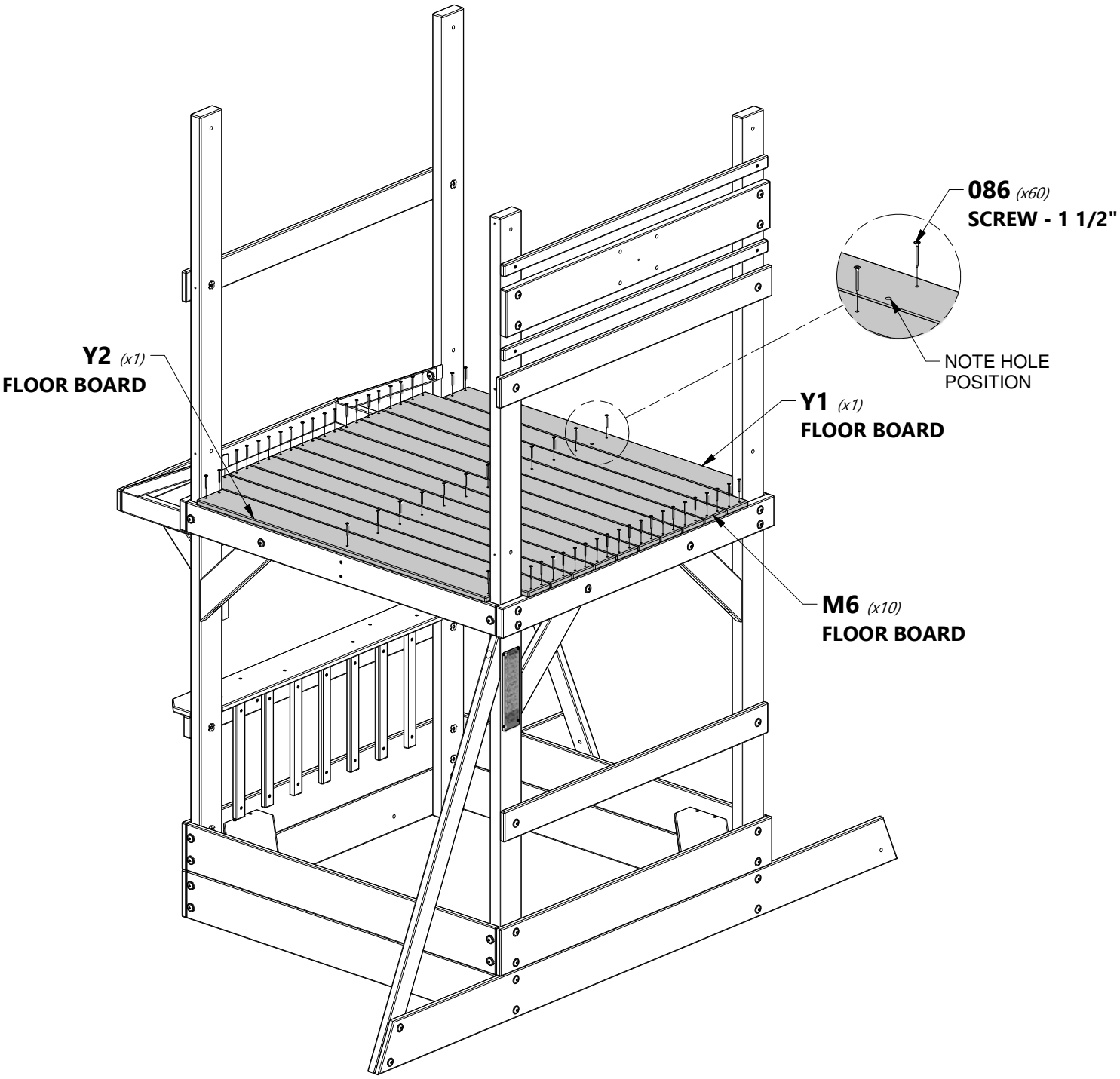

FORT ASSEMBLY

STEP 15

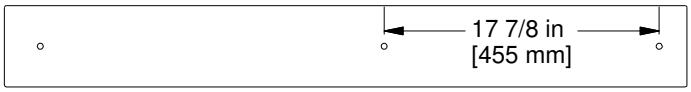

K6 (1) | **GROUND BOARD - W4L13852**
5/8"x5 1/4"x44 1/2" (16x134x1129)

J7 (1) | **LADDER RAIL - W4L13846**
1"x2 3/8"x50 3/8" (24x60x1279)

A4M01048 (1) | **L BRACKET 2.5x38x55x55**

H100010 (2) | **BOLT WH** *5/16x1-1/2*

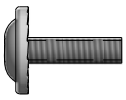

H100008 (1) | **BOLT WH** *5/16x1*

H100004 (2) | **NUT BARREL WH**
5/16 x 5/8

H100115 (2) | **BOLT WH** *5/16x1/2*

H100030 (3) | **WASHER LOCK EXT**
8x19

H100031 (2) | **WASHER LOCK EXT**
12x19

H100074 (2) | **T-NUT** *5/16*

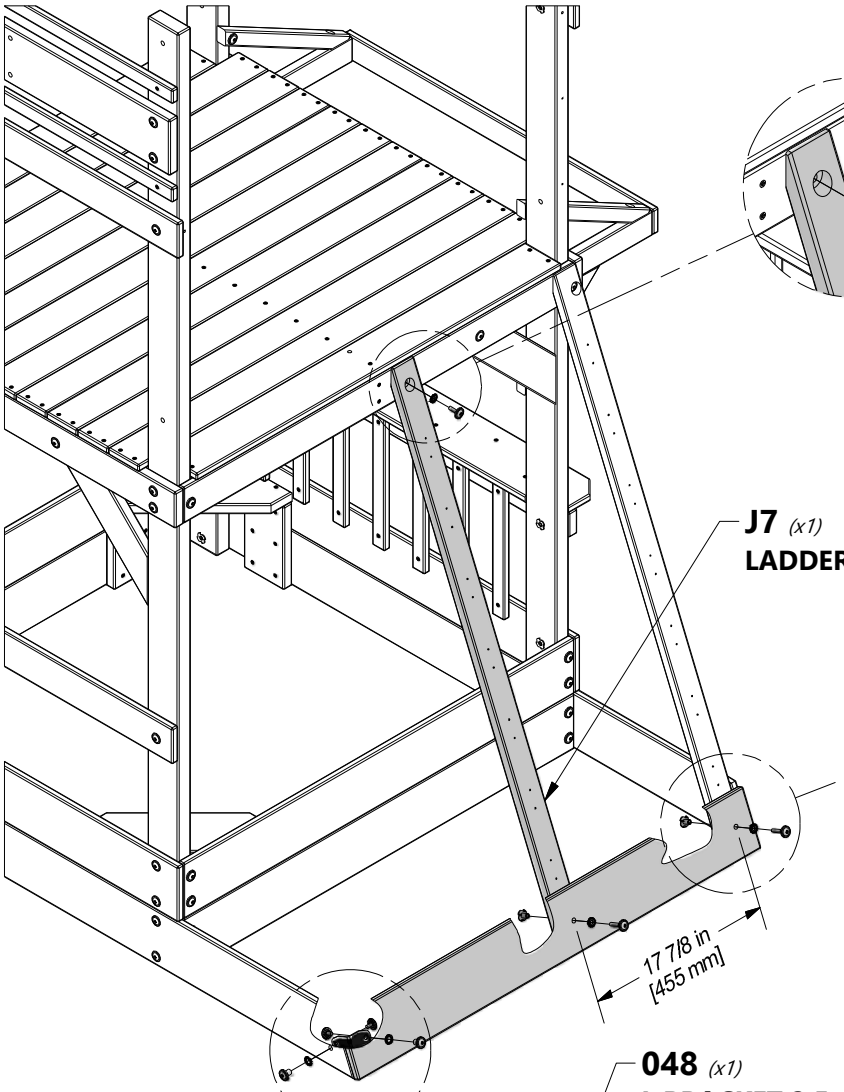

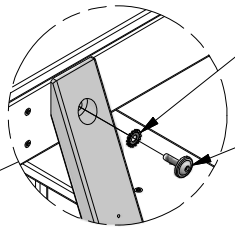

030 *(x1)*
WASHER - 8x19

008 *(x1)*
BOLT - 5/16x1"

J7 *(x1)*
LADDER RAIL

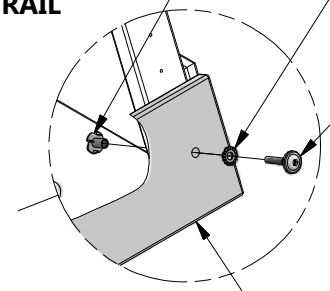

074 *(x2)*
T-NUT - 5/16"

030 *(x2)*
WASHER - 8x19

010 *(x2)*
BOLT - 1 1/2"

K6 *(x1)*
GROUND BOARD

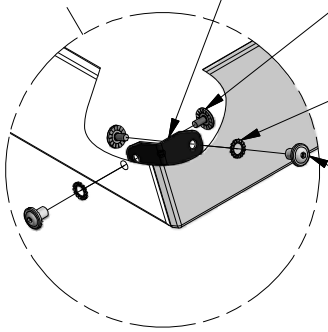

048 *(x1)*
L BRACKET 2.5x38x55x55

115 *(x2)*
BOLT - 1/2"

031 *(x2)*
WASHER - 12x19

004 *(x2)*
NUT BARREL - 5/8"

FORT ASSEMBLY

STEP 16

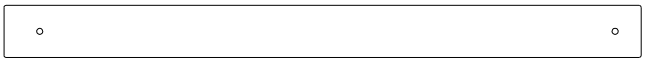

M7 (2) | **WALL RAIL - W4L06919**
5/8"x3 3/8"x41 1/2" (16x86x1054)

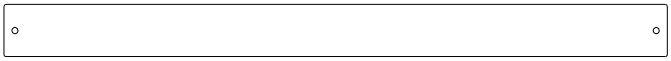

M9 (1) | **WALL RAIL - W4L06941**
5/8"x3 3/8"x43 1/4" (16x86x1097)

H100012 (4) | **BOLT WH**
5/16x2

H100026 (2) | **LAG SCREW WH**
5/16x1 1/2

H100030 (6) | **WASHER LOCK EXT**
8x19

H100074 (4) | **T-NUT**
5/16

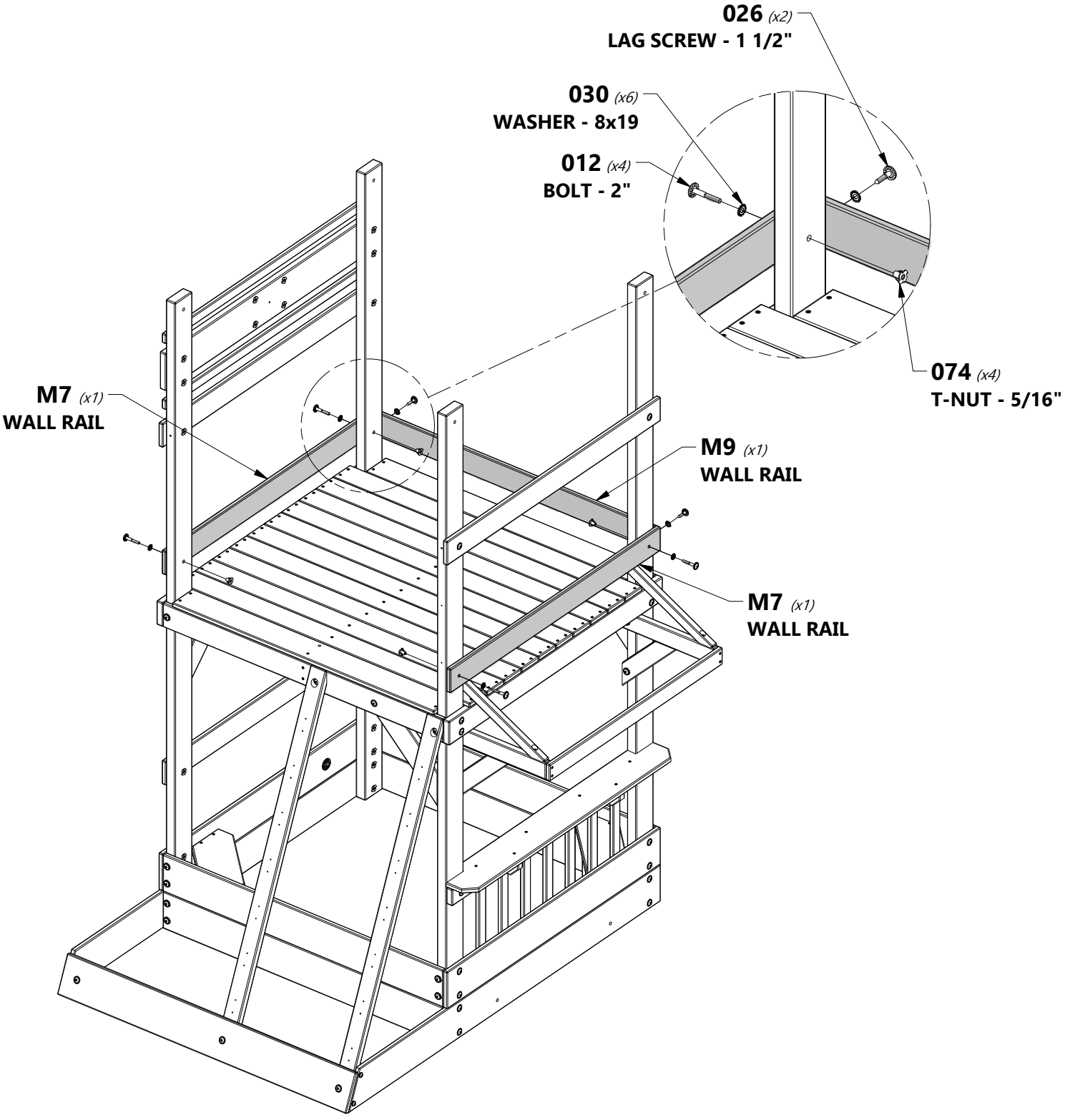

FORT ASSEMBLY

STEP 17

O4 | **AWNING BOARD - W4L06957**
(1) | *5/8"x1 3/8"x32 1/4" (16x34x818)*

A6P00124 | **AWNING**
(1)

H100088 | **SCREW PFH**
(4) | *8x1 1/8*

H100128 | **SCREW PWH**
(4) | *8x5/8*

HOLD O4 BOARD DOWN 1" - 25mm FROM TOP & CENTERED IN OPENING.

O4 *(x1)*
AWNING BOARD

088 *(x4)*
SCREW - 1 1/8"

1" (25mm)

124 *(x1)*
AWNING

128 *(x4)*
SCREW - 5/8

GROMMETS THIS END

FORT ASSEMBLY

STEP 18

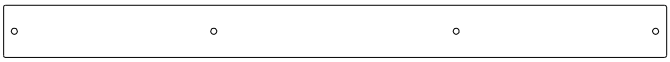

M10 *(1)* | **WALL RAIL - W4L06942**
5/8"x3 3/8"x43 1/4" (16x86x1097)

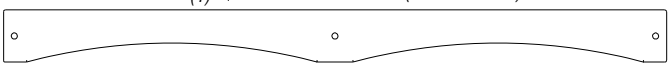

M11 *(1)* | **ARCHED WALL RAIL - W4L06943**
5/8"x3 3/8"x43 1/4" (16x86x1097)

H100026 *(4)* | **LAG SCREW WH**
5/16x1 1/2

H100030 *(4)* | **WASHER LOCK EXT**
8x19

H100074 *(2)* | **T-NUT**
5/16

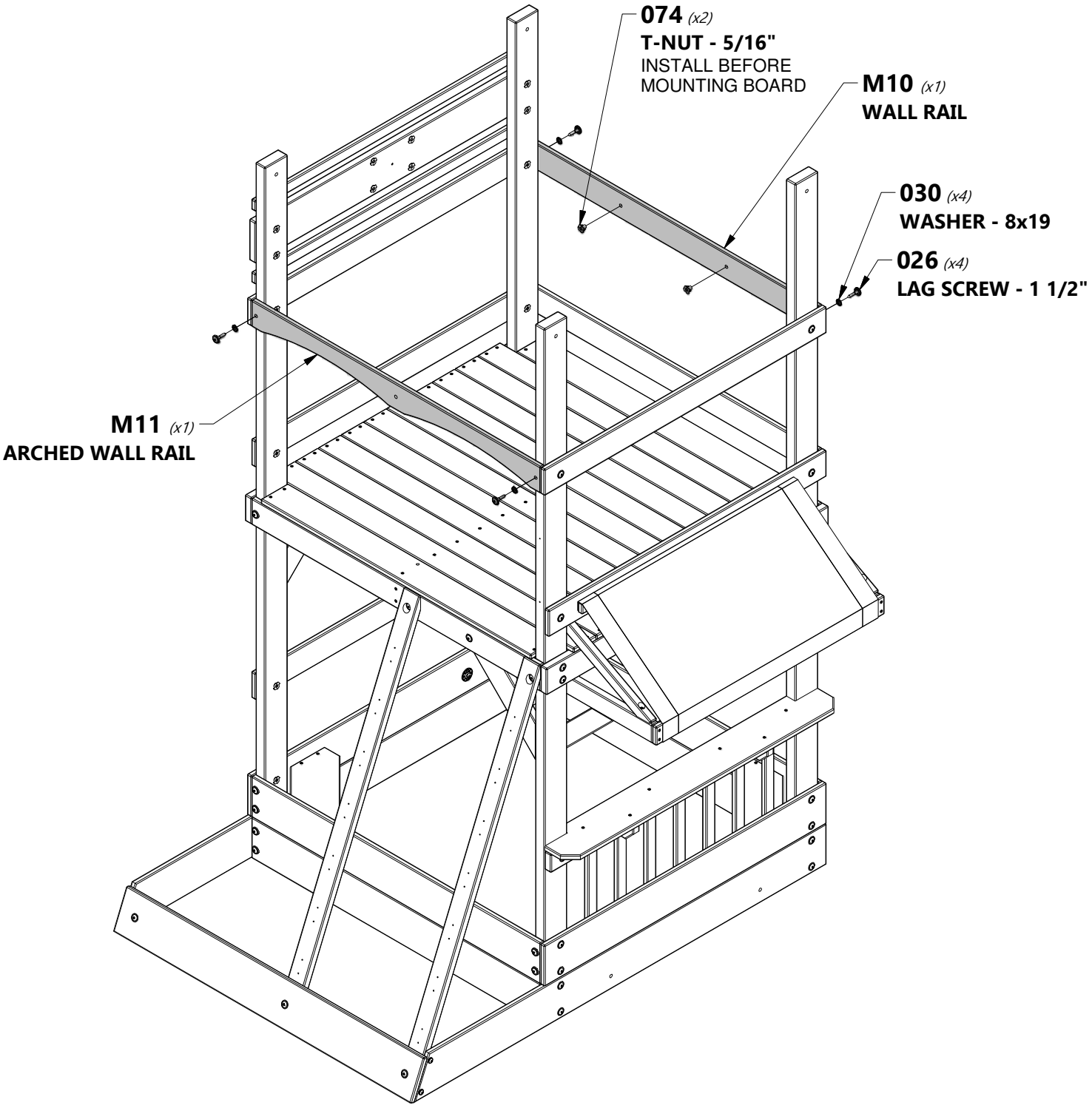

FORT ASSEMBLY

STEP 19

J8 | **WALL BOARD - W4L06947**
(1) | *1"x2 3/8"x25" (24x60x634)*

A4M01048 | **L BRACKET 2.5x38x55x55**
(1)

H100010 | **BOLT WH** 5/16x1-1/2
(1)

H100115 | **BOLT WH** 5/16x1/2
(1)

H100145 | **LAG SCREW WH** *1/4x1 1/2*
(1)

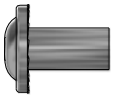

H100005 | **NUT BARREL WH** 5/16x7/8
(1)

H100030 | **WASHER LOCK EXT** 8x19
(1)

H100031 | **WASHER LOCK EXT** 12x19
(1)

H100074 | **T-NUT** 5/16
(1)

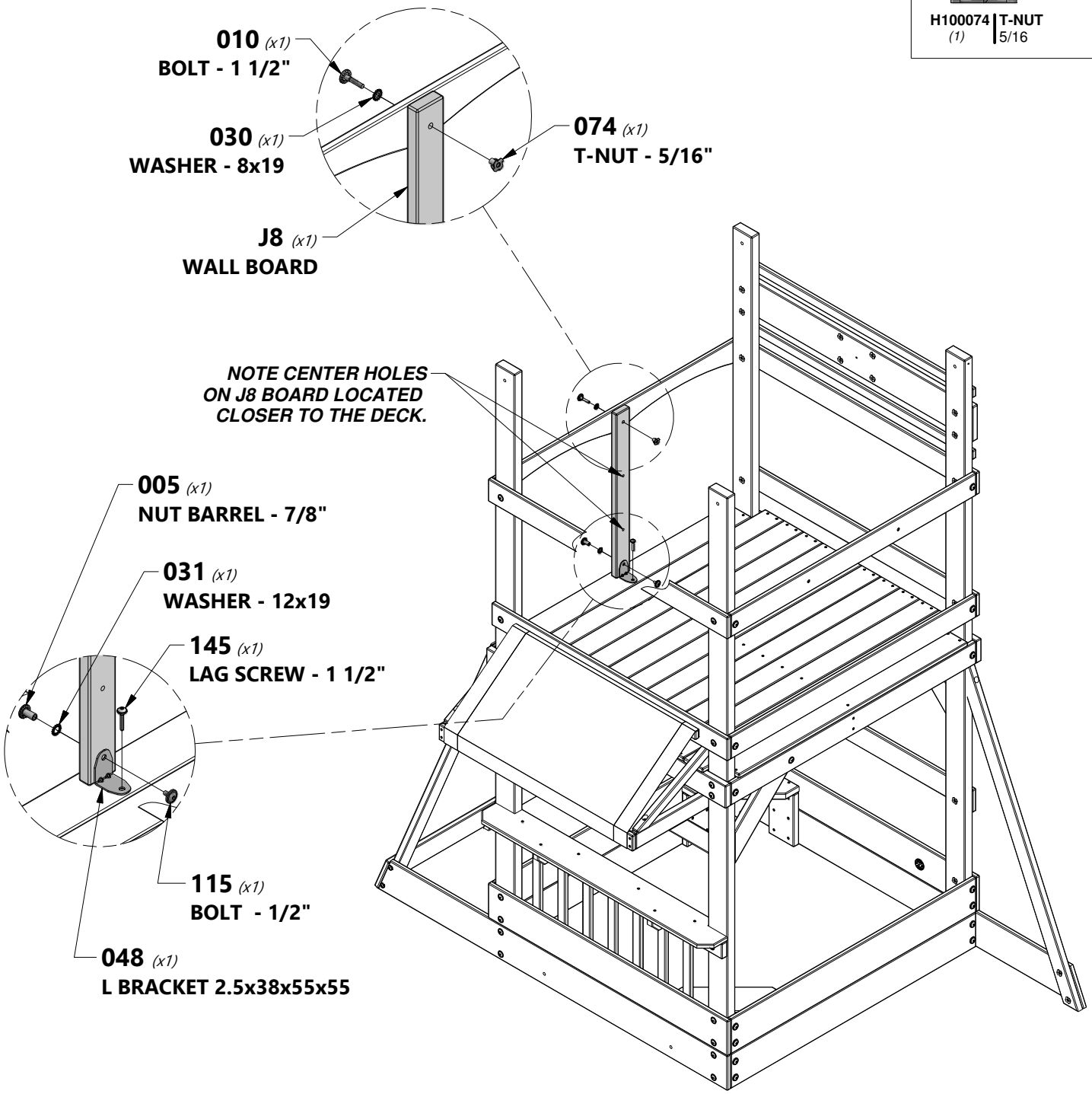

FORT ASSEMBLY

STEP 20

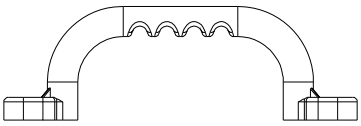

A6P00127 (2) | HAND GRIP LIME PLASTIC

H100142 (2) | BOLT WH 1/4x1-1/4

H100145 (2) | LAG SCREW WH 1/4x1 1/2

H100138 (2) | WASHER LOCK EXT 6x15

H100108 (2) | WASHER LOCK INT 8x15

H100072 (2) | T-NUT 1/4

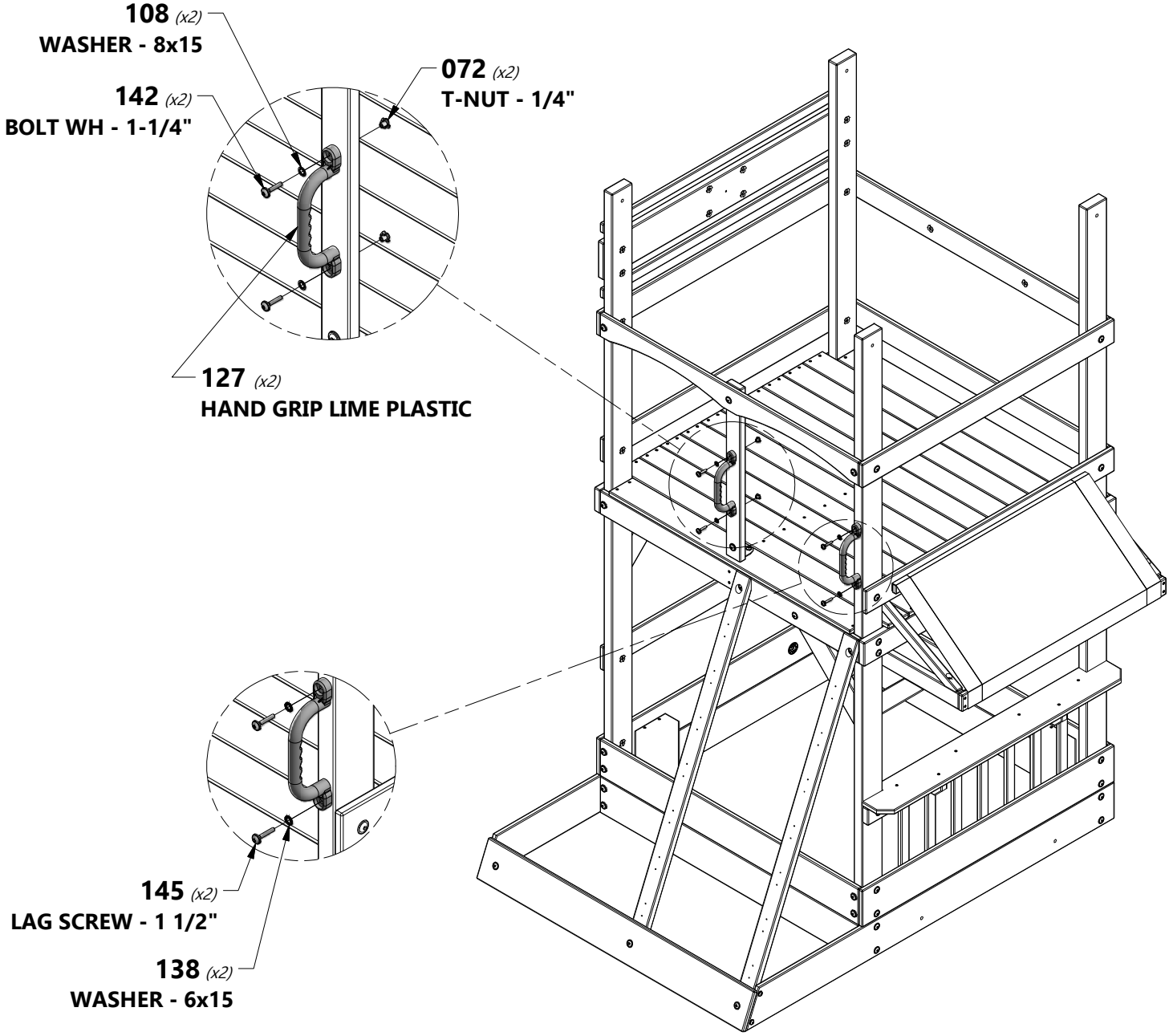

FORT ASSEMBLY

STEP 21

O2 (7) | **PICKET - W4L06944**
5/8"x1 3/8"x18 1/4" (16x34x465)

H100088 (14) | **SCREW PFH**
8x1 1/8

CENTER O2 BOARDS IN OPENING, APPROXIMATELY 1 7/8" - 46mm DOWN FROM M8 BOARD. APPROXIMATELY 3 1/8" - 79mm SPACING BETWEEN PICKETS.

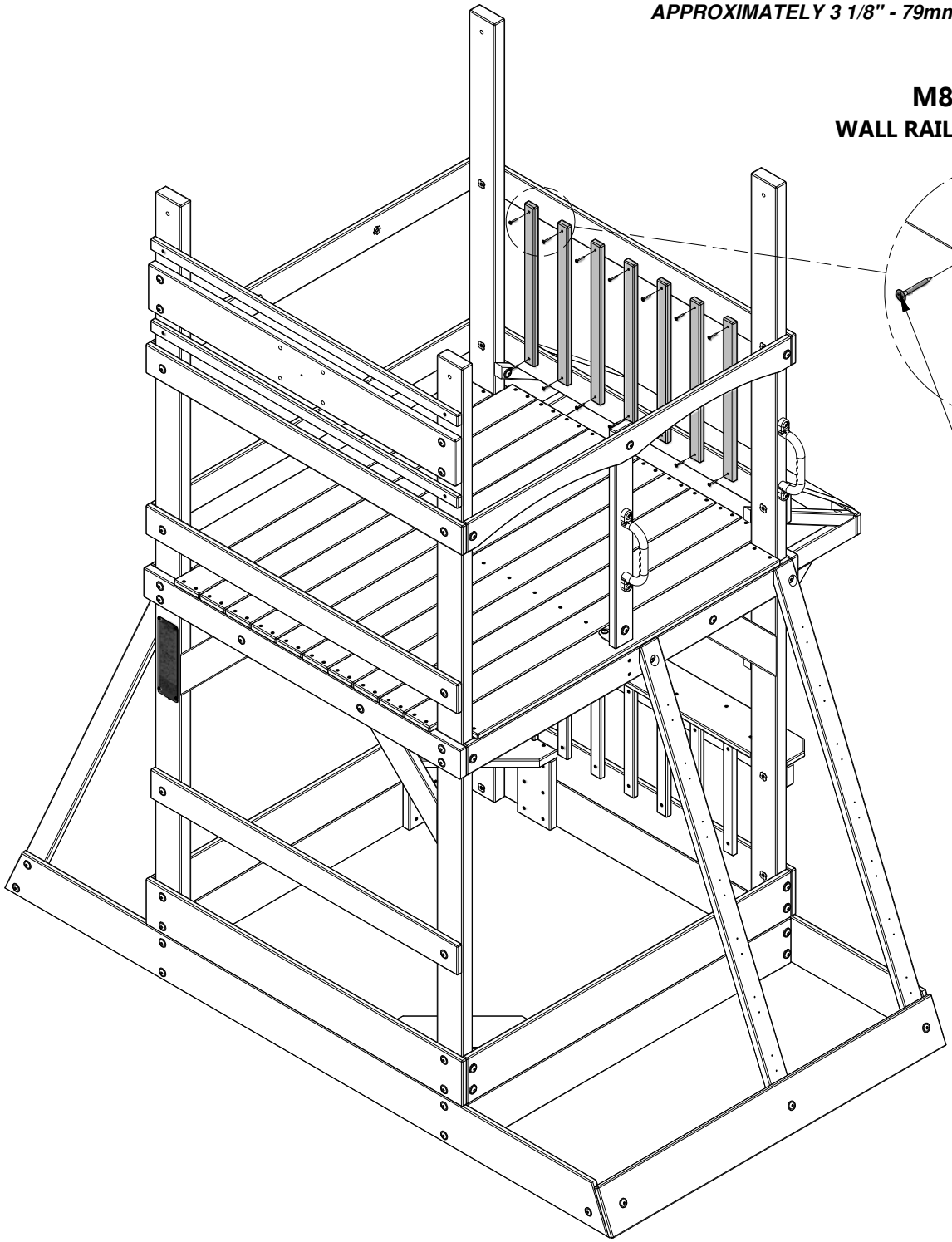

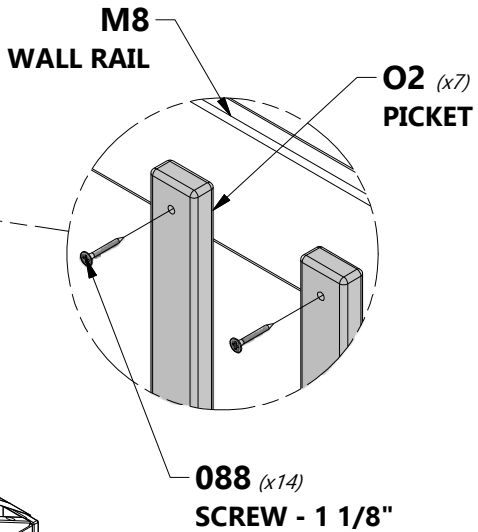

FORT ASSEMBLY

STEP 22

O2 *(9)* | **PICKET - W4L06944**
5/8"x1 3/8"x18 1/4" (16x34x465)

H100088 *(18)* | **SCREW PFH**
8x1 1/8

CENTER O2 BOARDS IN OPENING, APPROXIMATELY
1 7/8" - 46mm DOWN FROM M10 BOARD.
2 7/8" - 72mm SPACING BETWEEN PICKETS.

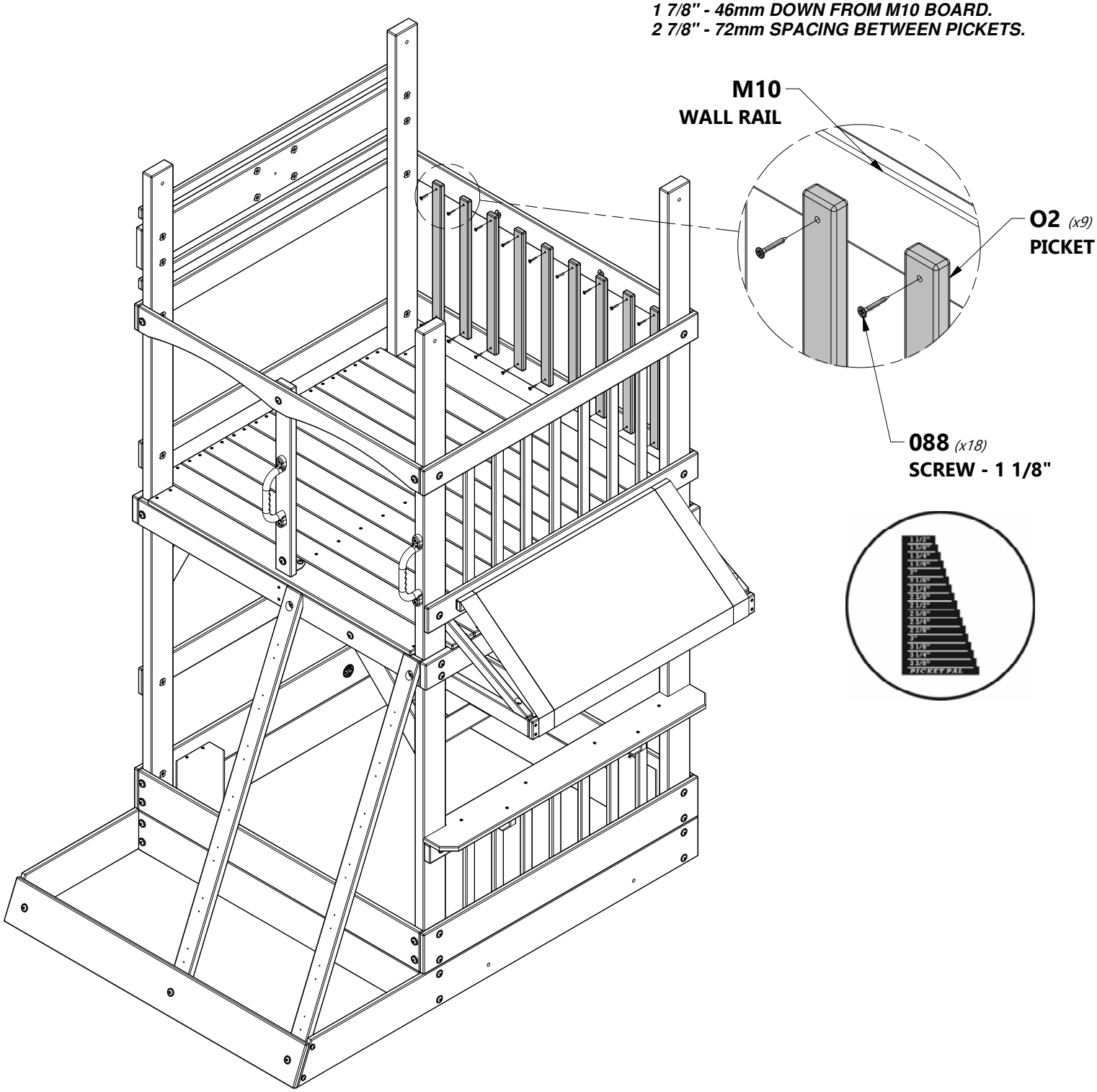

FORT ASSEMBLY

STEP 23

O2 *(7)* | **PICKET - W4L06944**
5/8"x1 3/8"x18 1/4" (16x34x465)

H100088 *(14)* | **SCREW PFH**
8x1 1/8

CENTER O2 BOARDS IN OPENING, APPROXIMATELY 1 7/8" - 46mm DOWN FROM M8 BOARD. APPROXIMATELY 3 1/8" - 79mm SPACING BETWEEN PICKETS.

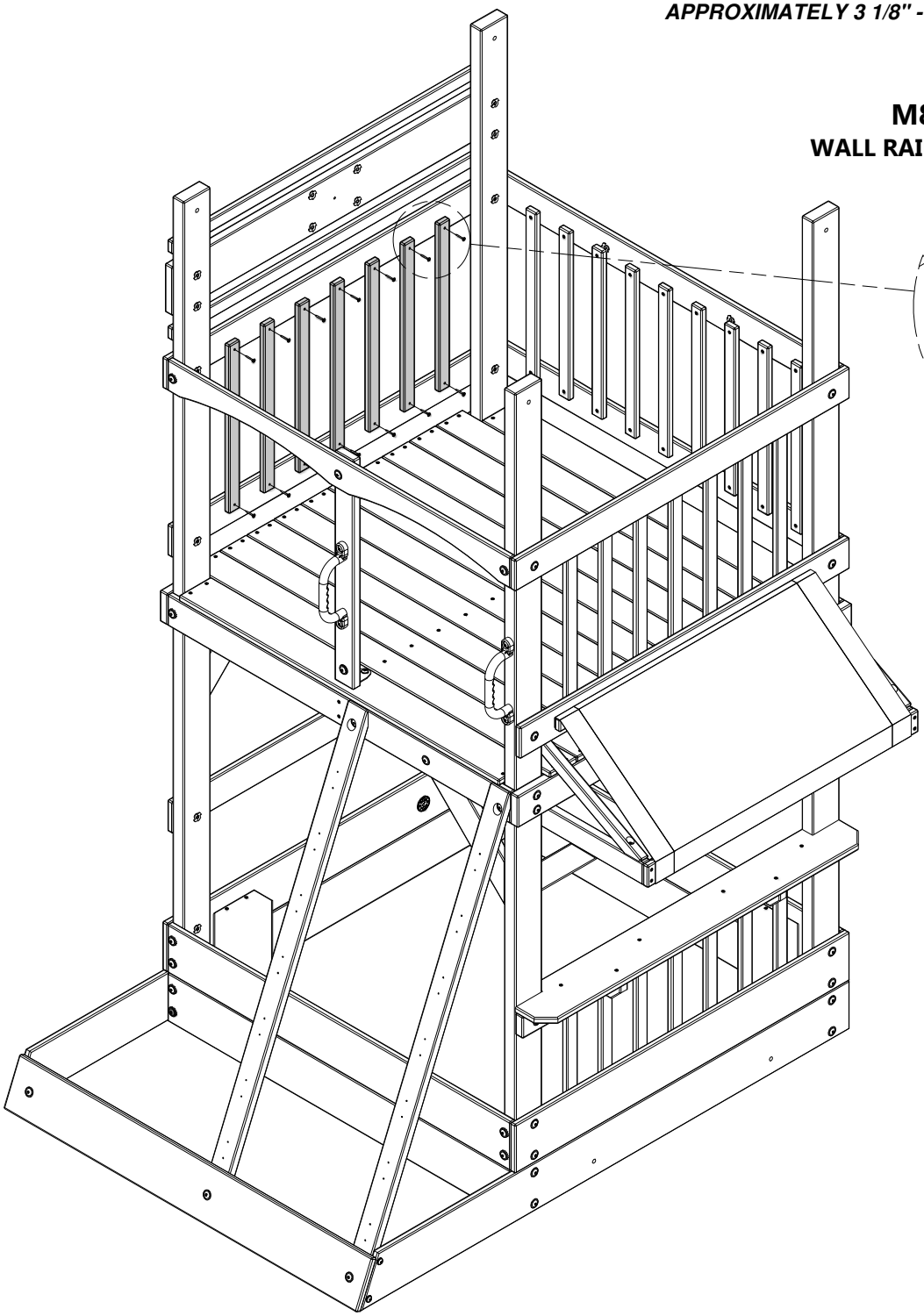

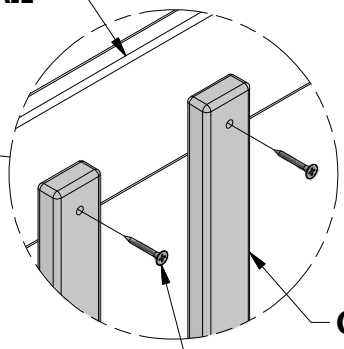

FORT ASSEMBLY

STEP 24

H4 | **HORIZONTAL TARP SUPPORT - W4L13838**
(2) | *1"x3 3/8"x56 1/8" (24x86x1425)*

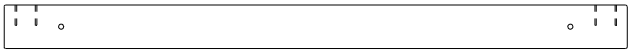

H5 | **HORIZONTAL TARP SUPPORT - W4L13839**
(2) | *1"x3 3/8"x48 3/4" (24x86x1237)*

A4M01048 | **L BRACKET 2.5x38x55x55**
(4)

H100013 | **BOLT WH**
(4) | *5/16x2 1/4*

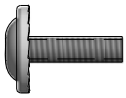

H100008 | **BOLT WH**
(4) | *5/16x1*

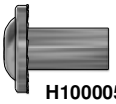

H100005 | **NUT BARREL WH**
(4) | 5/16x7/8

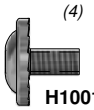

H100115 | **BOLT WH**
(4) | *5/16x1/2*

H100030 | **WASHER LOCK EXT**
(4) | 8x19

H100031 | **WASHER LOCK EXT**
(4) | 12x19

H100074 | **T-NUT**
(8) | *5/16*

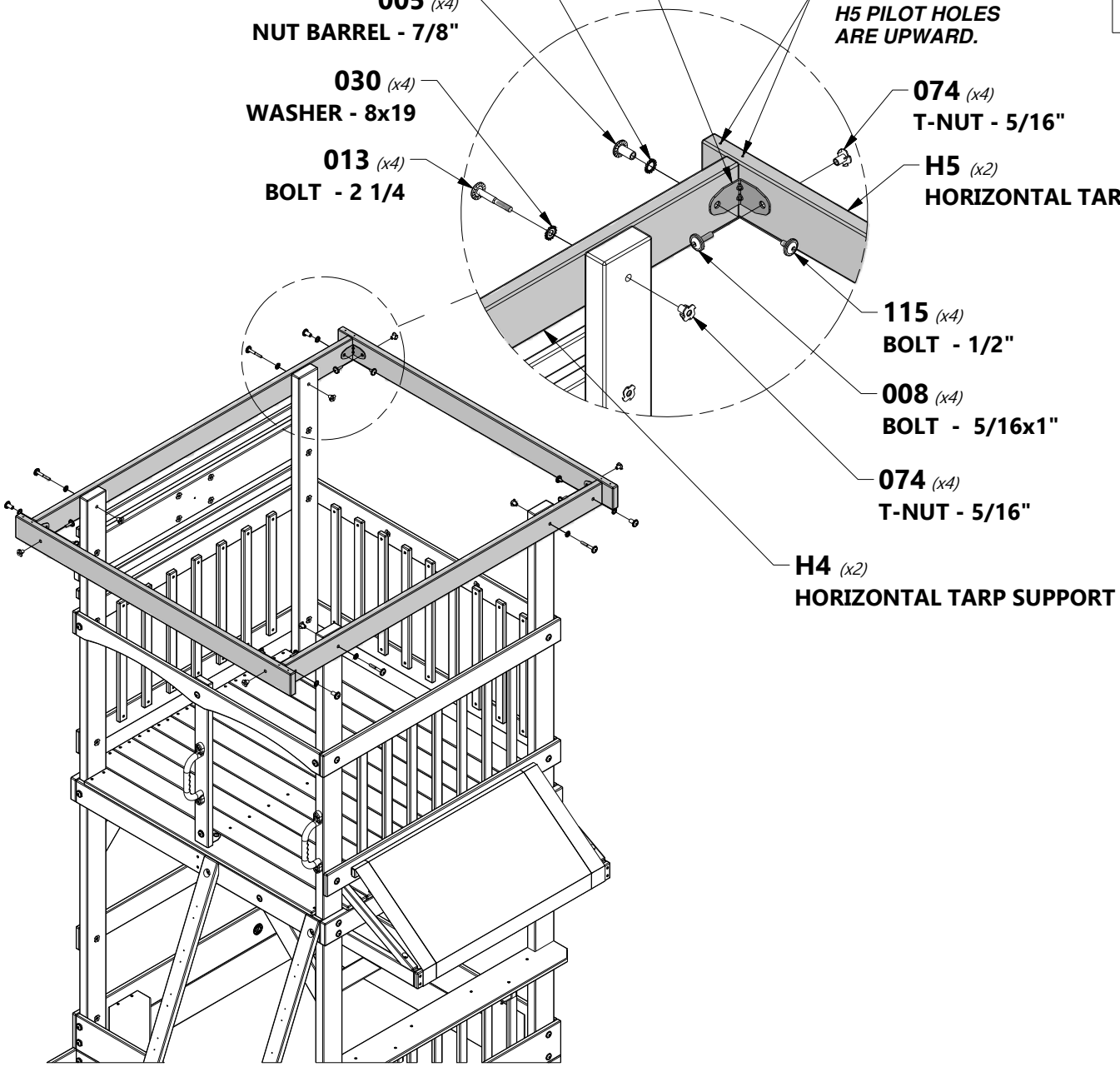

FORT ASSEMBLY

STEP 25

H6 | **ROOF BOARD - W4L06950**
(4) | *1"x3 3/8"x40 3/8" (24x86x1025)*

T1 | **ROOF BOARD - W4L06951**
(1) | *1"x1 3/8"x48 3/4" (24x34x1237)*

H100086 | **SCREW PFH**
(8) | *8x1 1/2*

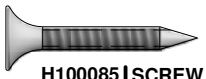

H100085 | **SCREW PFH**
(8) | *8x1*

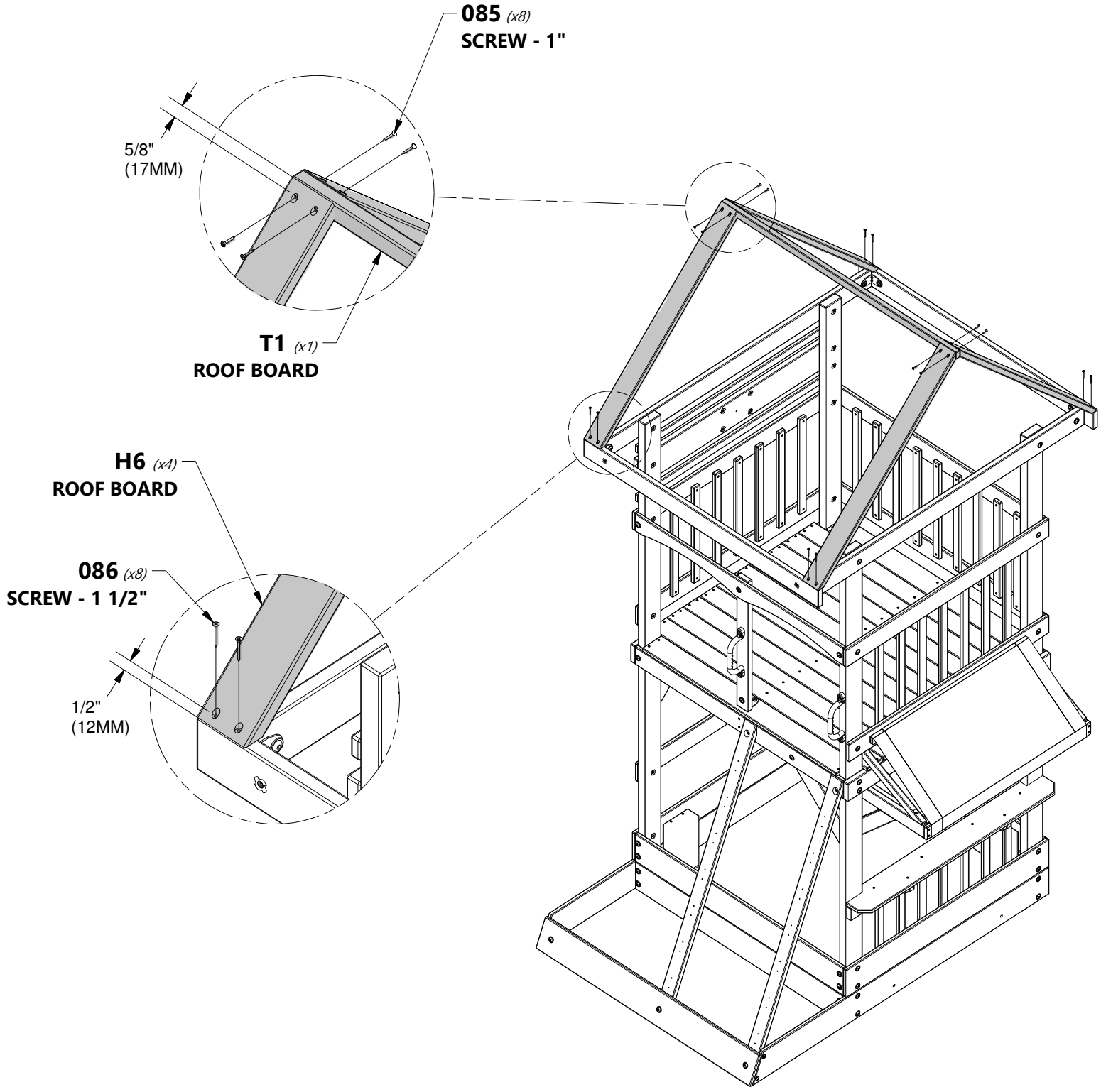

FORT ASSEMBLY

STEP 26

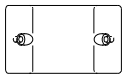

J10 *(2)* | **ROOF BOARD - W4L06952**
1"x2 3/8"x4" (24x60x102)

H100085 *(4)* | **SCREW PFH**
8x1

FLUSH J10 BOARD TO THE INSIDE OF H6 BOARDS.

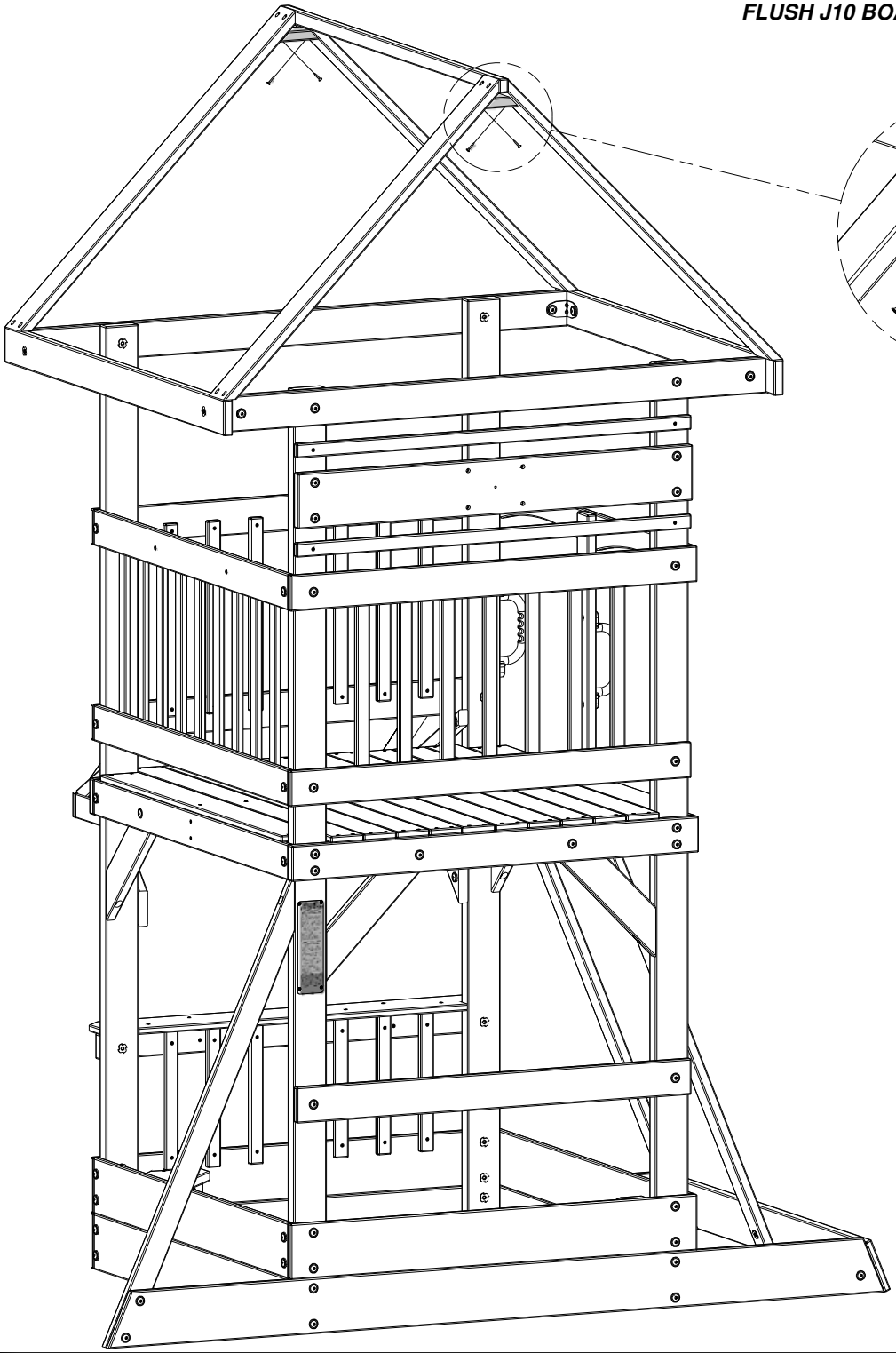

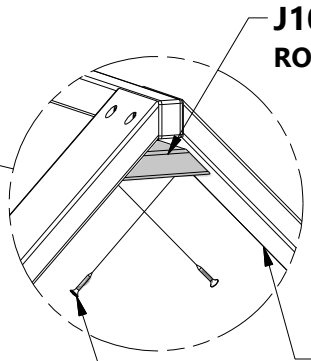

J10 *(x2)*
ROOF BOARD

H6
ROOF BOARD

085 *(x4)*
SCREW - 1"

FORT ASSEMBLY

STEP 27

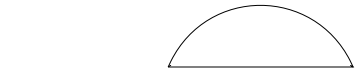

Y3 | **SUNBURST HALF MOON - W4L06954**
(2) | *5/8"x4"x12" (16x102x306)*

N2 | **ROOF BOARD - W4L06953**
(2) | *5/8"x2 3/8"x33 1/8" (16x60x840)*

H100087 | **SCREW PFH**
(8) | *8x1 1/4*

H100088 | **SCREW PFH**
(4) | *8x1 1/8*

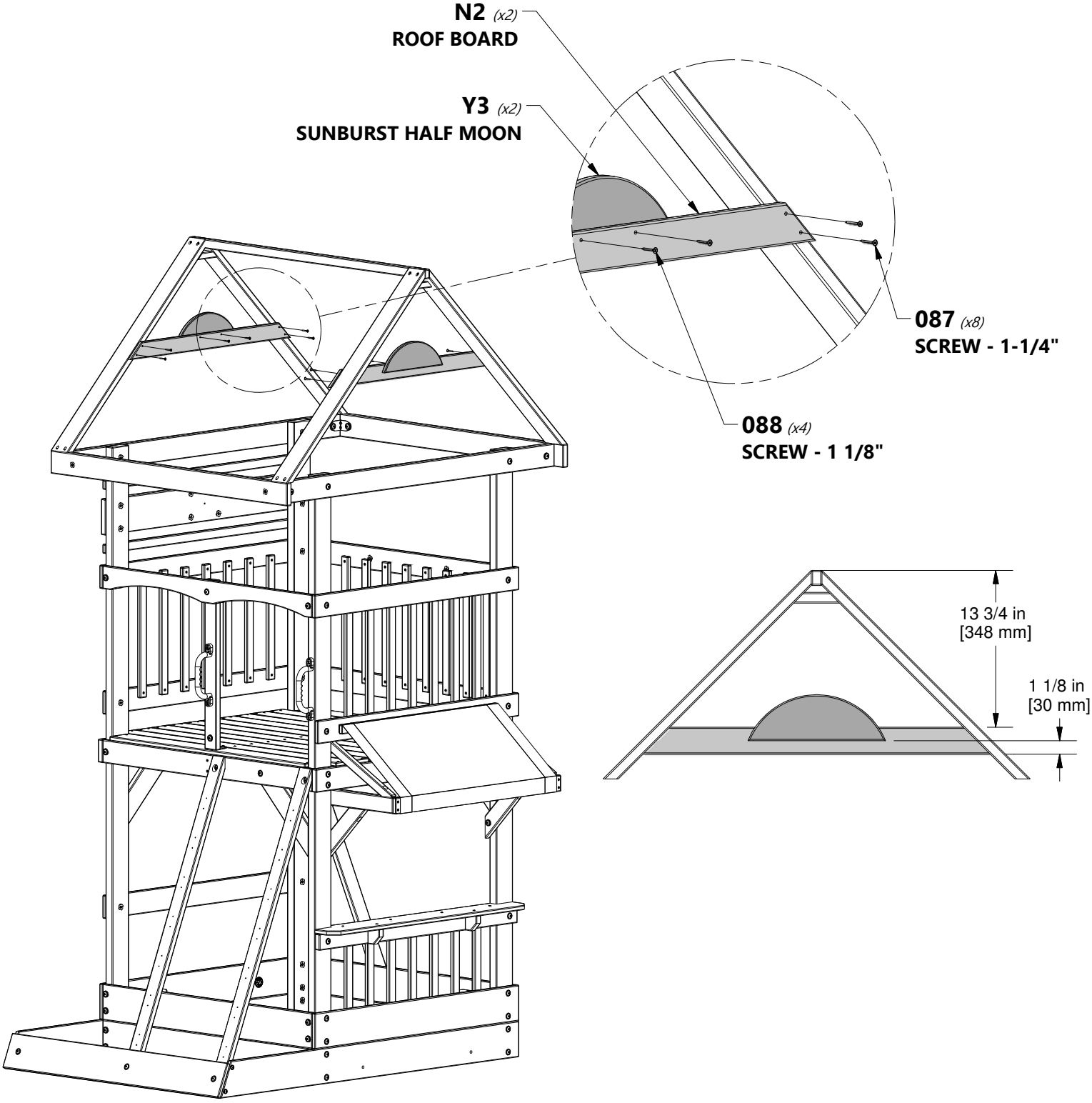

FORT ASSEMBLY

STEP 28

N4 | **SUNBURST BOARD - W4L06956**
(4) | *5/8"x2 3/8"x8 1/8" (16x60x205)*

N3 | **SUNBURST BOARD - W4L06955**
(2) | *5/8"x2 3/8"x11 3/4" (16x60x299)*

H100088 | **SCREW PFH**
(18) | *8x1 1/8*

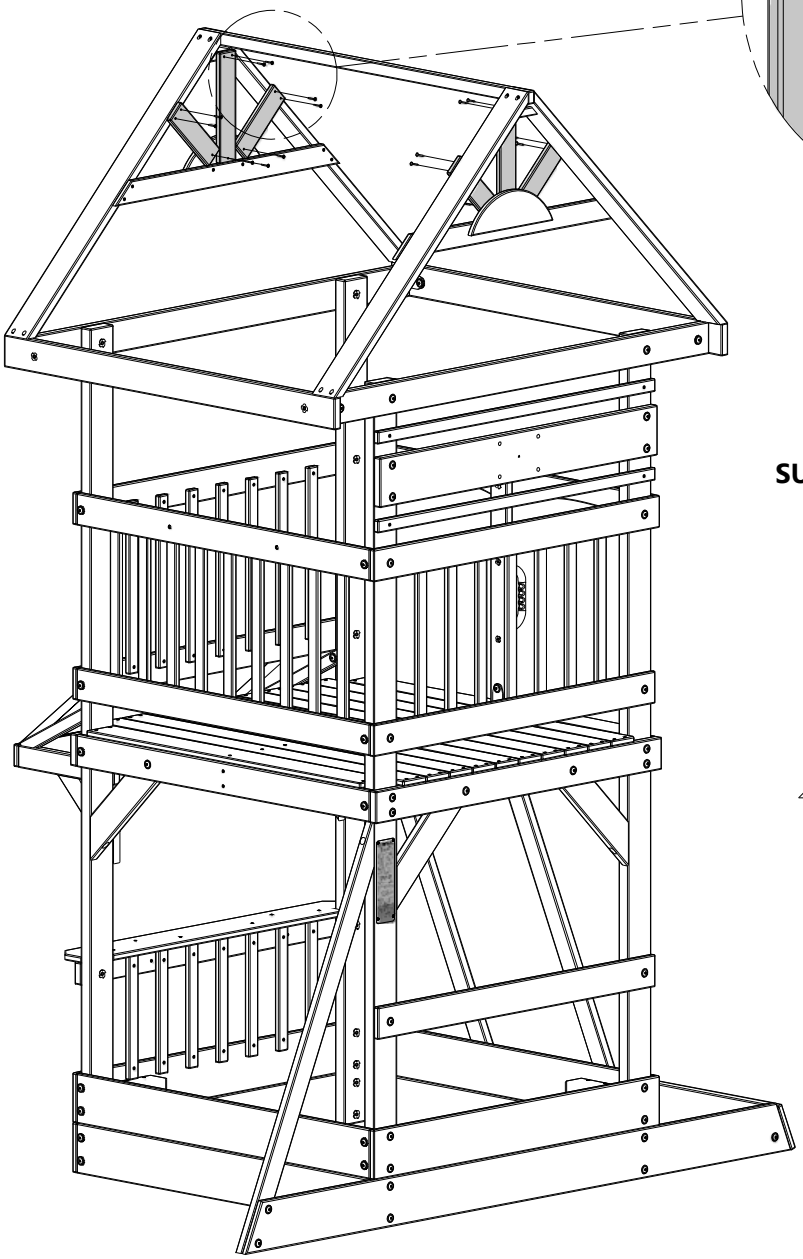

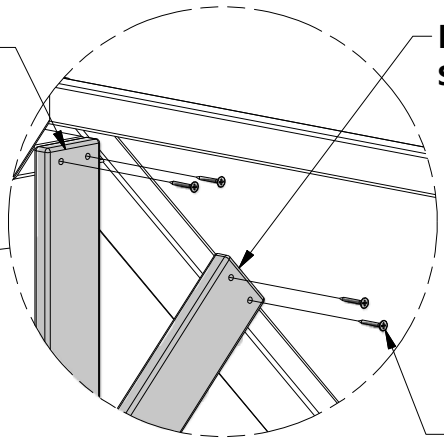

N3 *(x2)*
SUNBURST BOARD

N4 *(x4)*
SUNBURST BOARD

088 *(x18)*
SCREW - 1 1/8"

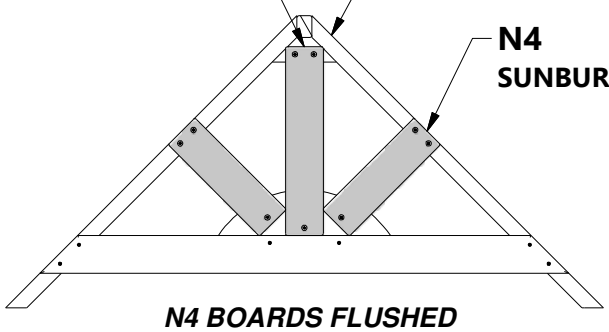

N3
SUNBURST BOARD

H6
ROOF BOARD

N4
SUNBURST BOARD

N4 BOARDS FLUSHED WITH H6 BOARDS.

FORT ASSEMBLY

STEP 29

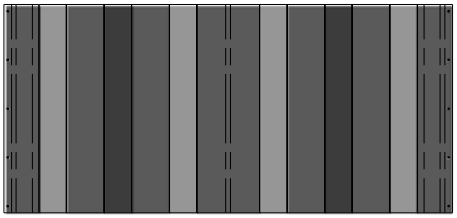

A6P00123 *(1)* | **TARP**

H100128 *(10)* | **SCREW PWH** *8x5/8*

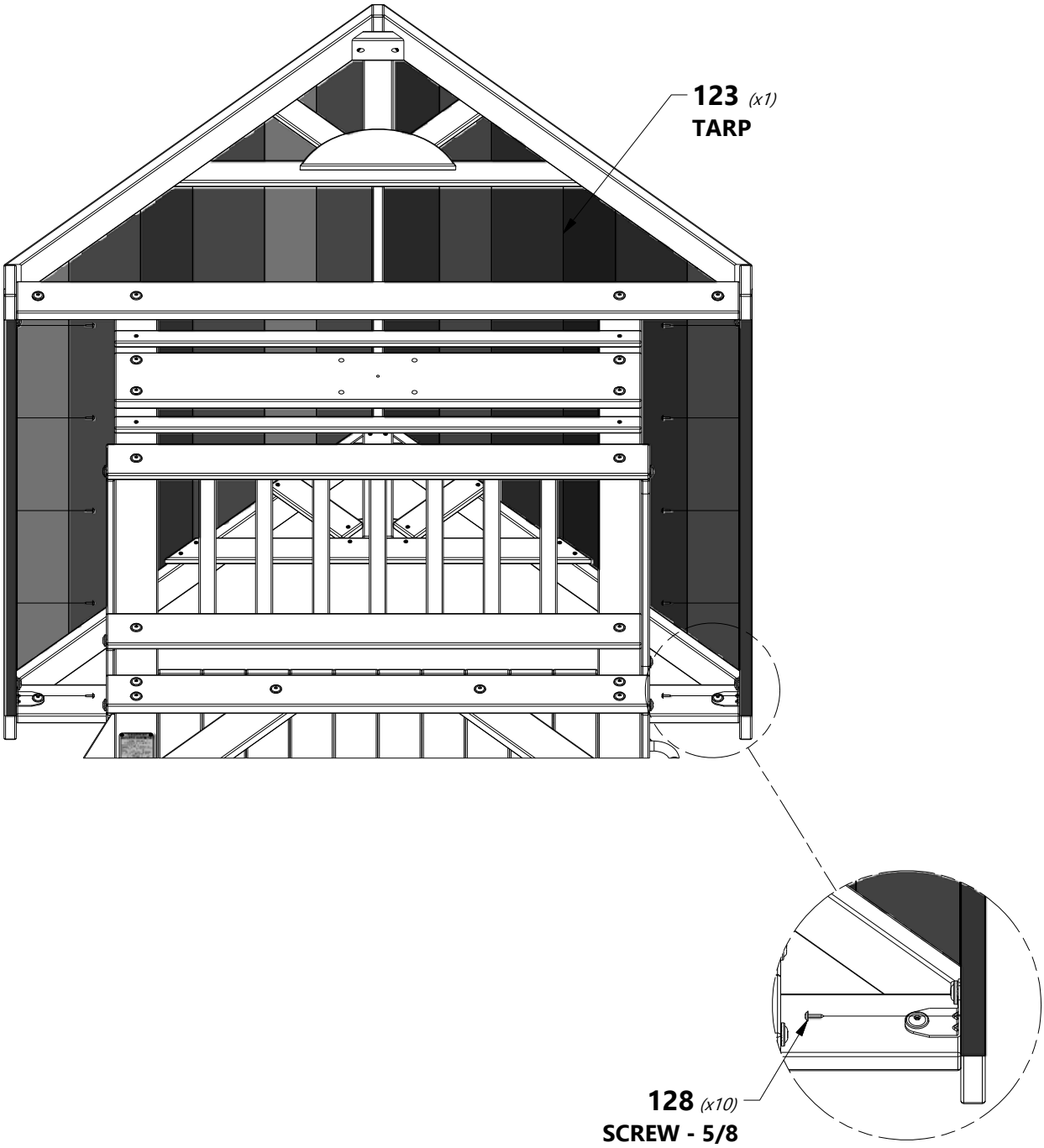

FORT ASSEMBLY

STEP 30

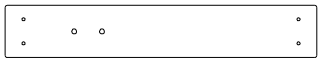

M4 *(6)* | **LADDER RUNG - W4L06913**
5/8"x3 3/8"x20 1/4" (16x86x515)

M3 *(1)* | **LADDER RUNG - W4L06912**
5/8"x3 3/8"x20 1/4" (16x86x515)

A6P00040 *(2)* | **BLUE HC ROCK #2**

A6P00128 *(2)* | **LIME HC ROCK #2**

A6P00129 *(2)* | **CRANBERRY HC ROCK #1**

H100063 *(12)* | **BOLT PTH** *1/4x3/4*

H100087 *(28)* | **SCREW PFH** *8x1 1/4*

H100108 *(12)* | **WASHER LOCK INT** 8x15

H100072 *(12)* | **T-NUT** *1/4*

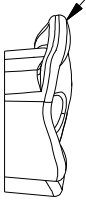

FINGER GRIP UPWARDS ON ROCKS

NOTE:
PLACE THE ROCKS AND HARDWARE ONTO THE M4 BOARDS BEFORE PLACING ON J6 AND J7 BOARDS.
ARRARNGE COLORS AS DESIRED.

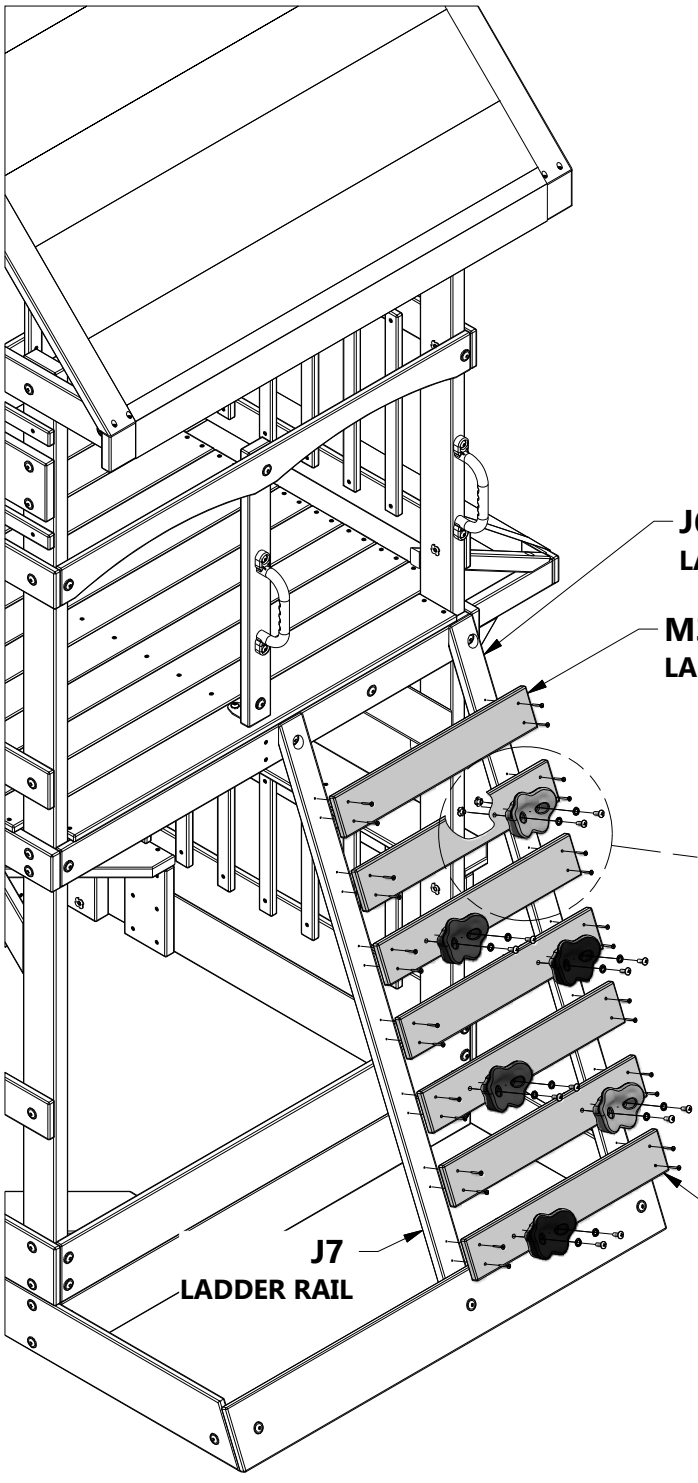

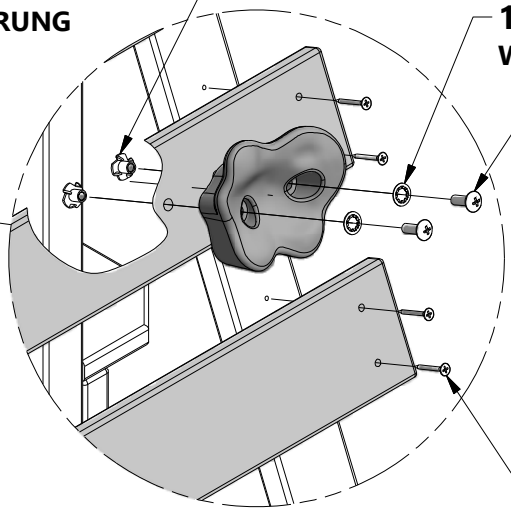

STEP 31

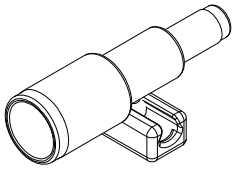

A6P00126 *(1)* | TELESCOPE BLUE/LIME

H100088 *(2)* | SCREW PFH *8x1 1/8*

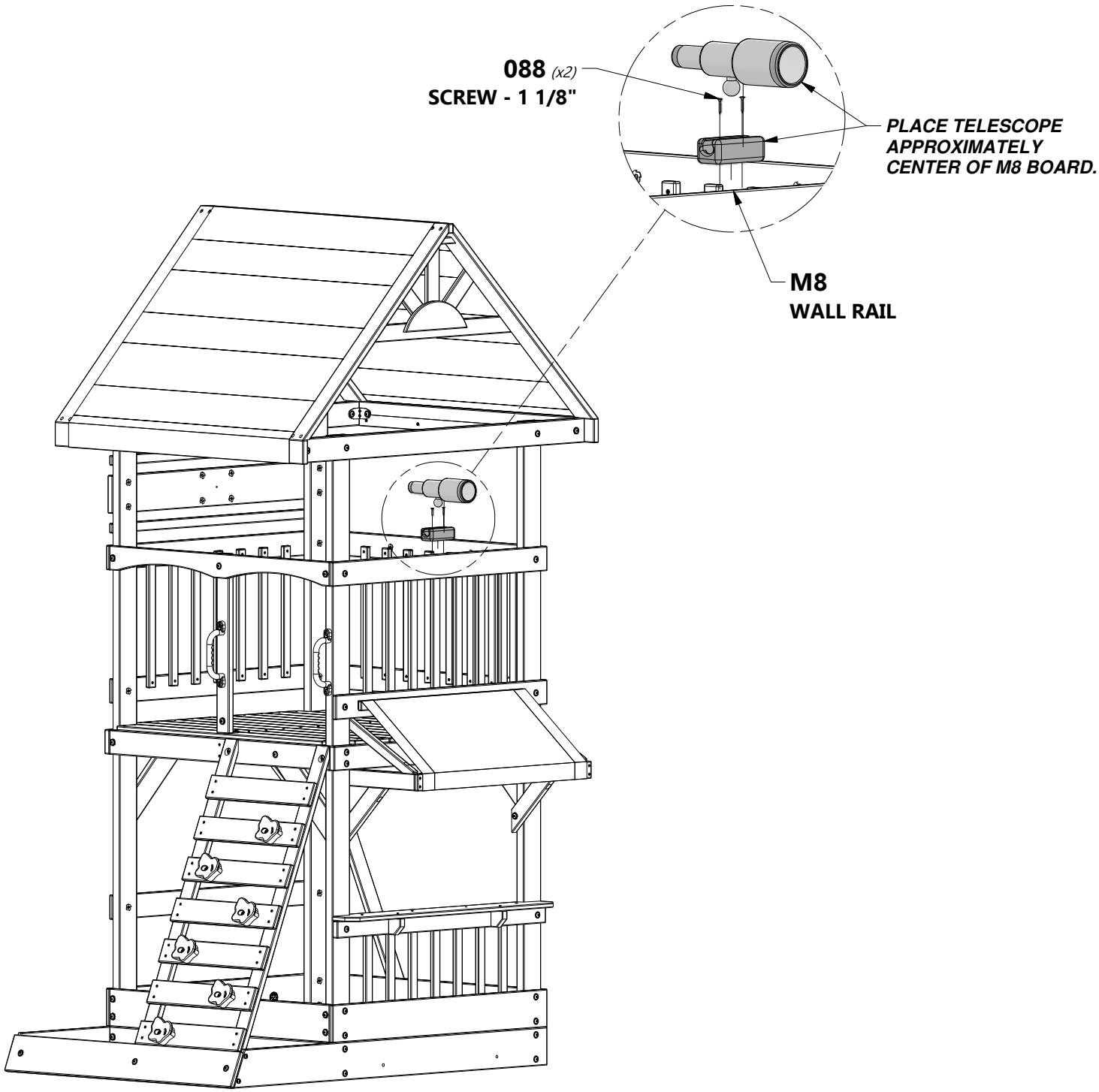

FORT ASSEMBLY

STEP 32

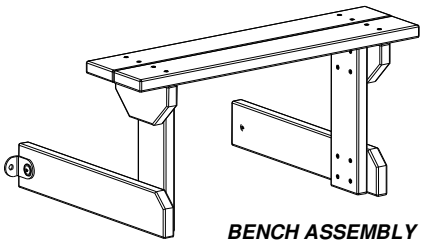

BENCH ASSEMBLY

H100115 *(2)* | **BOLT WH** *5/16x1/2*

115 *(x2)*
BOLT - 1/2"

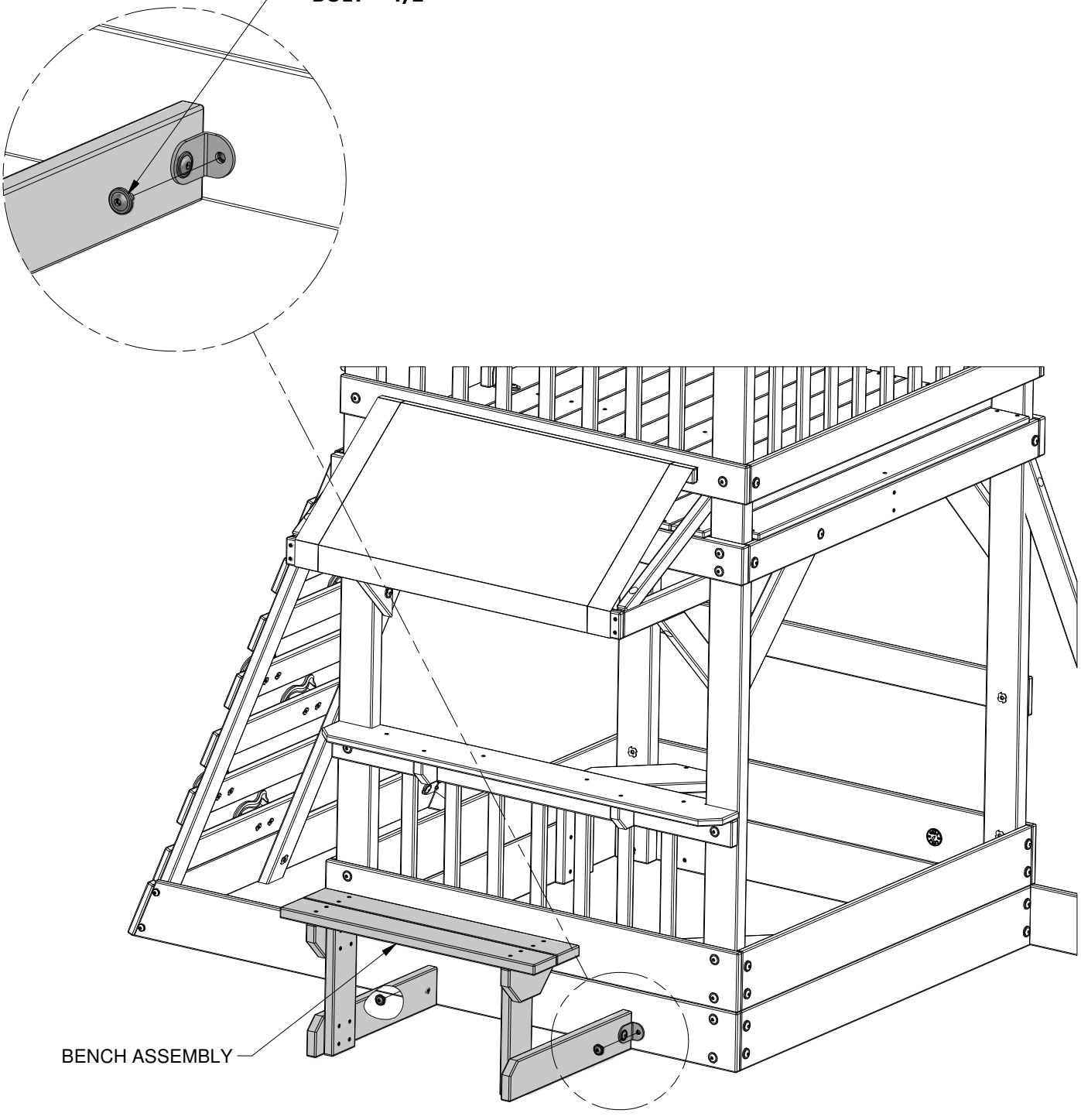

FORT ASSEMBLY

STEP 33

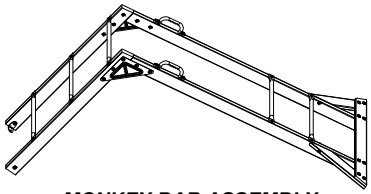

MONKEY BAR ASSEMBLY

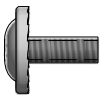

H100222 *(2)* | **BOLT WH** *5/16x3/4*

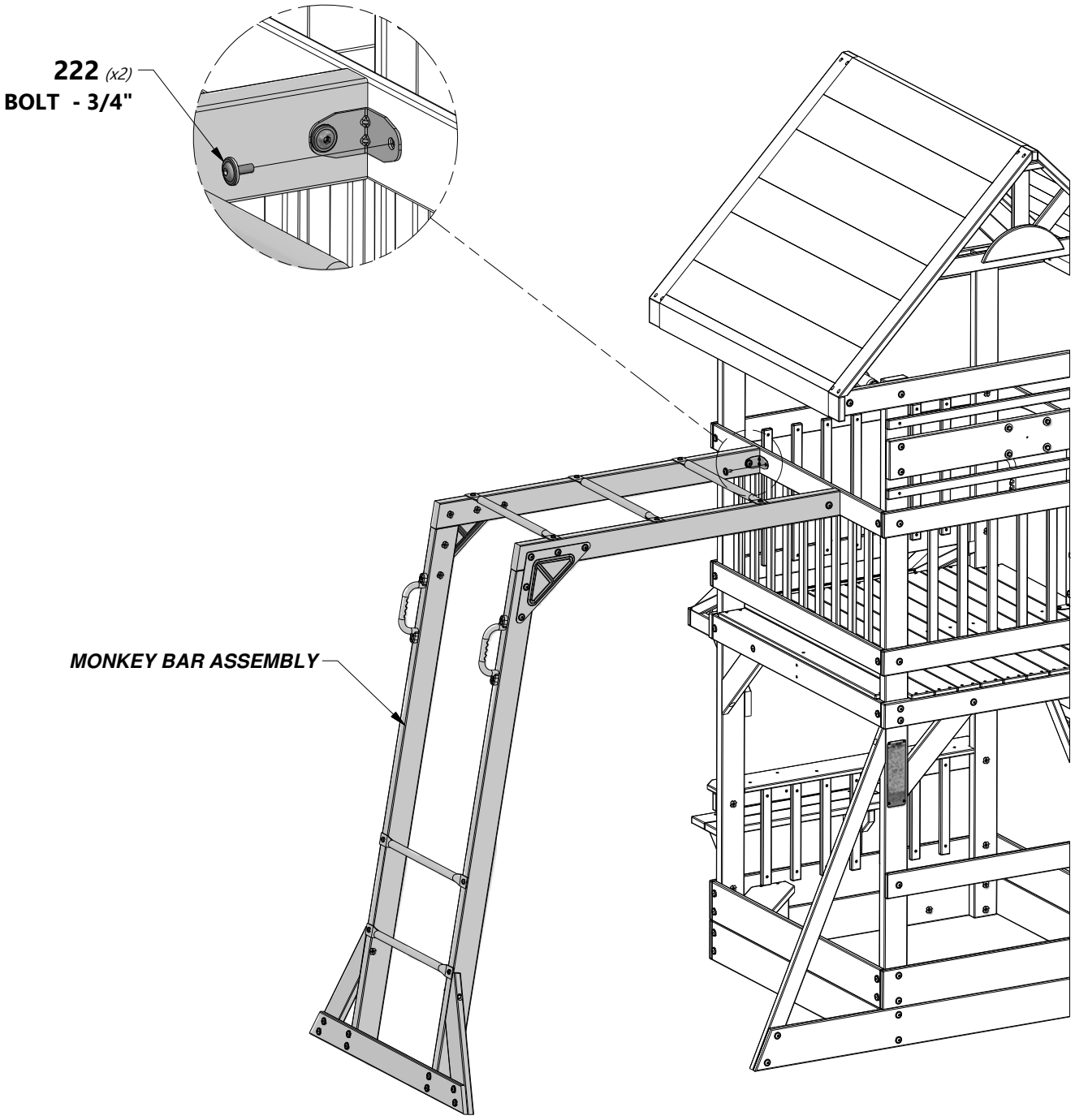

FORT ASSEMBLY

STEP 34

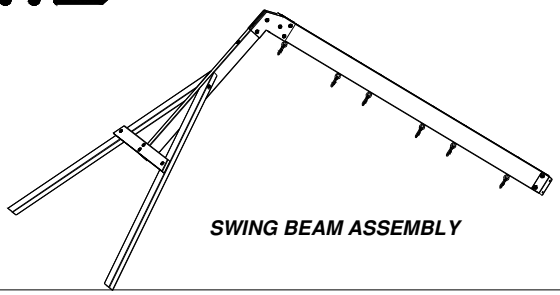

SWING BEAM ASSEMBLY

A100164 (1) | BYD ID TAG (LARGE) AGES 3-10

H100042 (4) | BOLT HEX 5/16x1 1/4

H100084 (4) | SCREW PFH 6x3/4

H100095 (4) | WASHER SPLIT 5/16

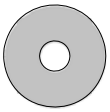

H100105 (4) | WASHER FLAT 8x27

105 *(x4)*
WASHER - 8x27

095 *(x4)*
WASHER - 5/16"

042 *(x4)*
BOLT HEX - 1 1/4"

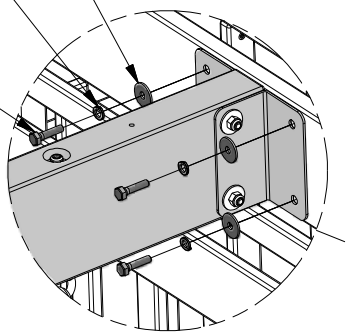

164 *(x1)*
BYD ID TAG (LARGE) AGES 3-10

SWING BEAM ASSEMBLY

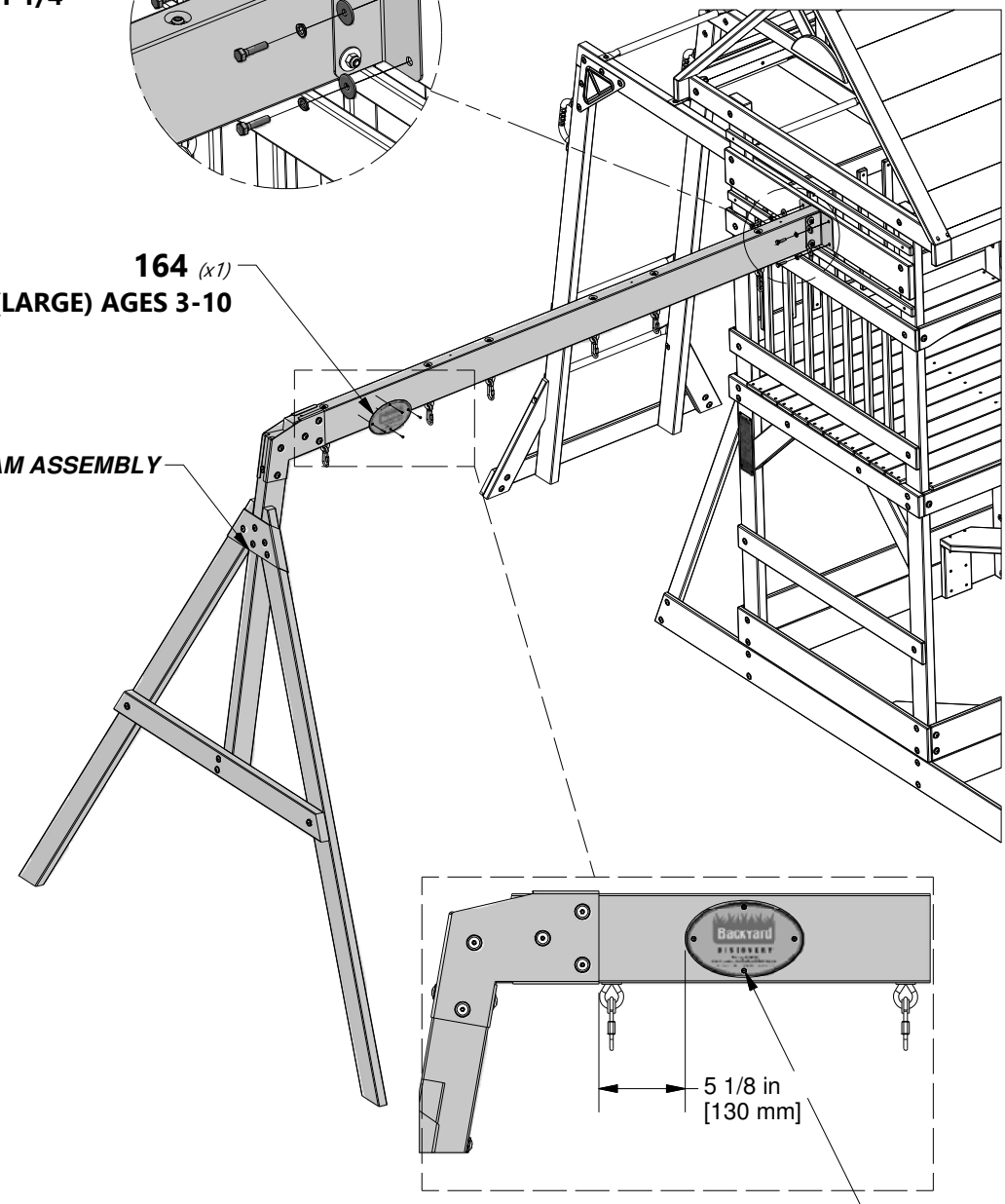

084 *(x4)*
SCREW - 6x3/4

FORT ASSEMBLY

STEP 35

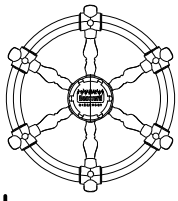

A6P00125 (1) | SHIPS WHEEL BLUE/LIME

H100029 (1) | LAG SCREW WH 5/16x3

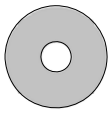

H100105 (1) | WASHER FLAT 8x27

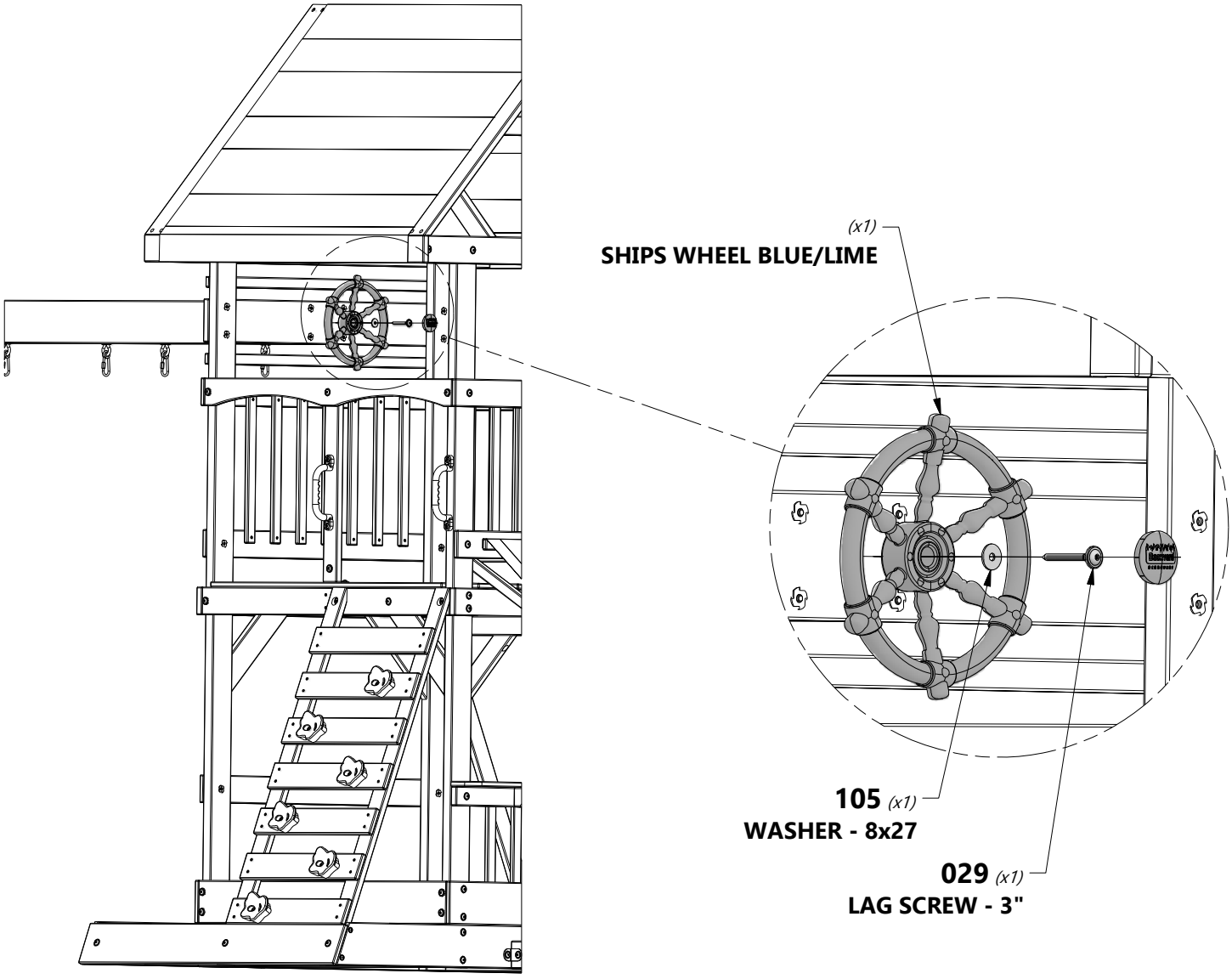

FORT ASSEMBLY

STEP 36

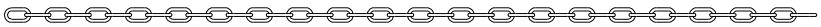

A4M00524 *(4)* | CHAIN BLUE 51.25"

A4M00525 *(2)* | CHAIN BLUE 31"

A100069 *(6)* | QUICK LINK

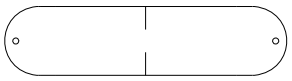

A6P00133 *(2)* | SWING SEAT BLUE 22"

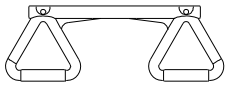

A6P00134 *(1)* | BLUE TRAPEZE

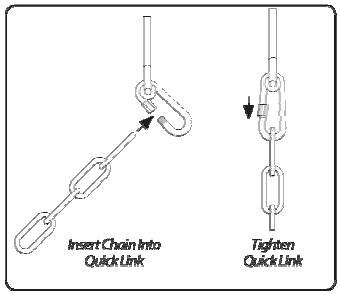

524 *(x4)*
CHAIN BLUE 51.25"

525 *(x2)*
CHAIN BLUE 31"

069 *(x2)*
QUICK LINK

134 *(x1)*
BLUE TRAPEZE

069 *(x4)*
QUICK LINK

405 *(x2)*
SWING SEAT BLUE 22"

FORT ASSEMBLY

STEP 37

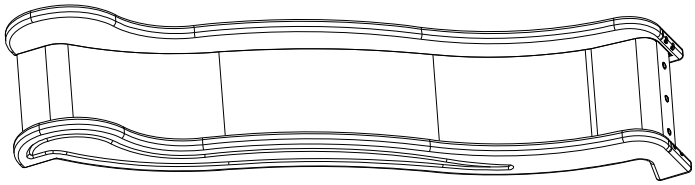

SLIDE ASSEMBLY

H100115 *(3)* | **BOLT WH** *5/16x1/2*

H100074 *(3)* | **T-NUT** *5/16*

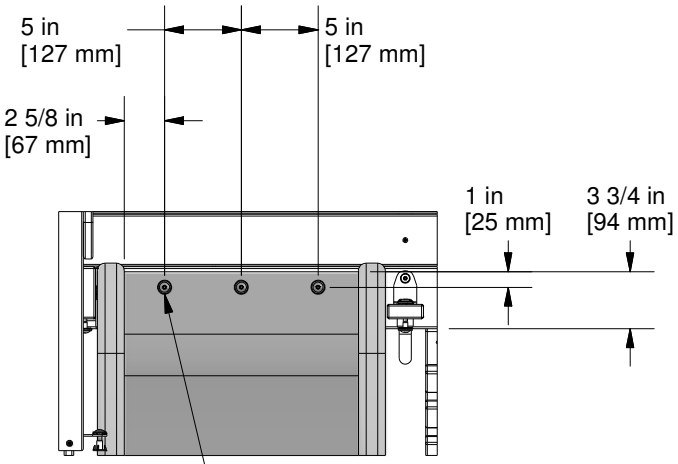

DRILL (3) 3/8" - (10mm) HOLES THROUGH SLIDE BED AND FLOOR BOARDS.

115 *(x3)*
BOLT - 1/2"

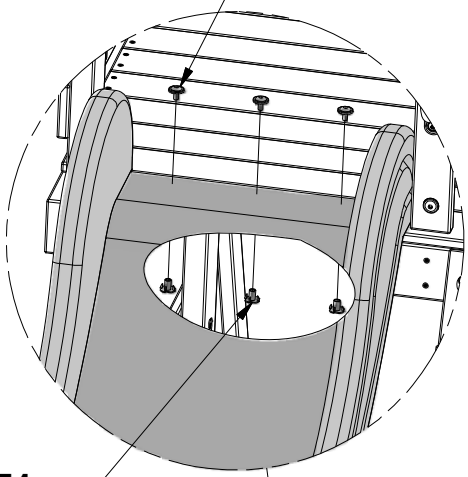

074 *(x3)*
T-NUT - 5/16"

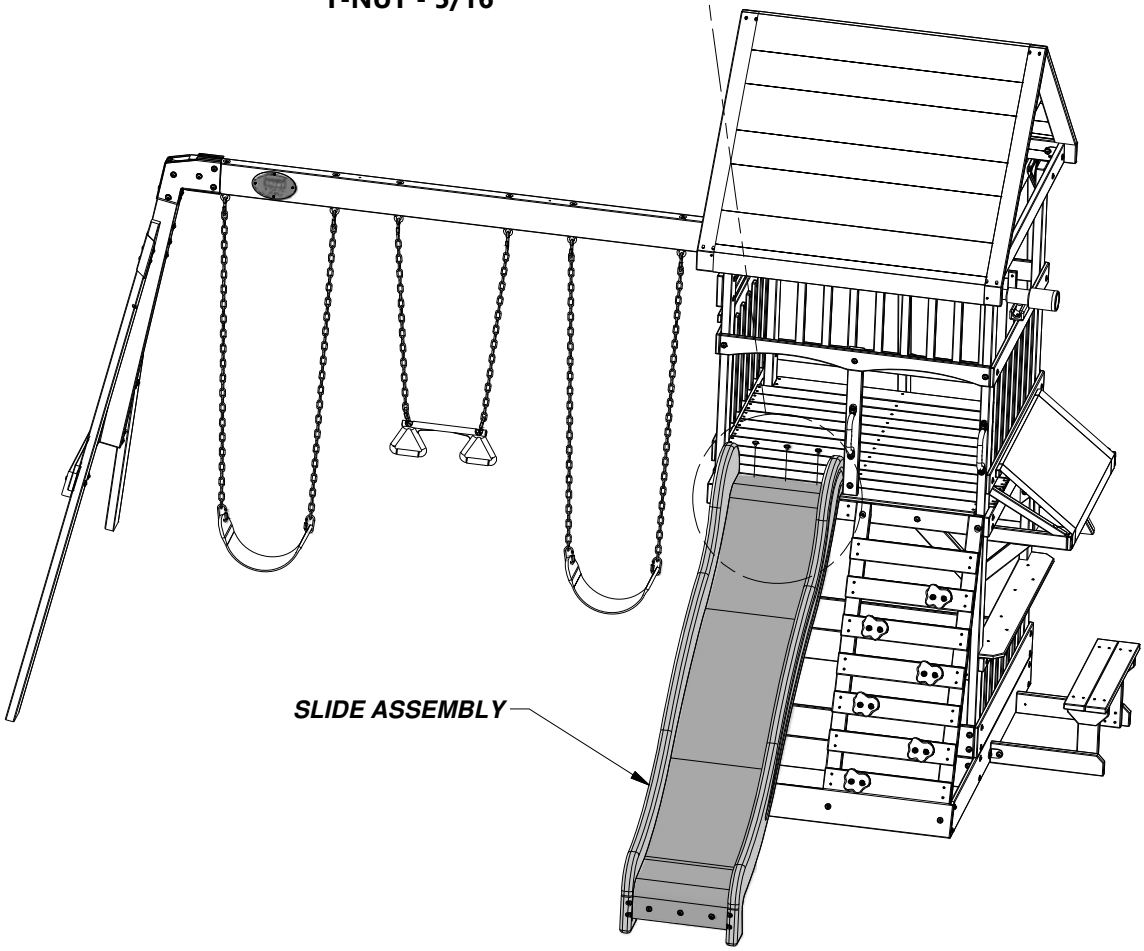

SLIDE ASSEMBLY

ANCHORING

STEP 38

A100178 *(8)* | AUGER GROUND STAKE

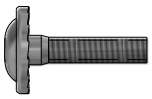

H100009 *(2)* | BOLT WH 5/16x1 1/4

H100222 *(6)* | BOLT WH *5/16x3/4*

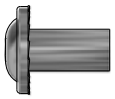

H100005 *(2)* | NUT BARREL WH 5/16x7/8

H100004 *(6)* | NUT BARREL WH 5/16 x 5/8

H100031 *(8)* | WASHER LOCK EXT 12x19

NOTE:

FAILURE TO USE GROUND STAKES CAN VOID WARRANTY & CAUSE INJURY!

SCREW AUGER INTO GROUND AT LOCATIONS SHOWN. USING AUGER AS A TEMPLATE DRILL 3/8" - (10mm) HOLES THRU BOARD, & ATTACH USING SUPPLIED HARDWARE.

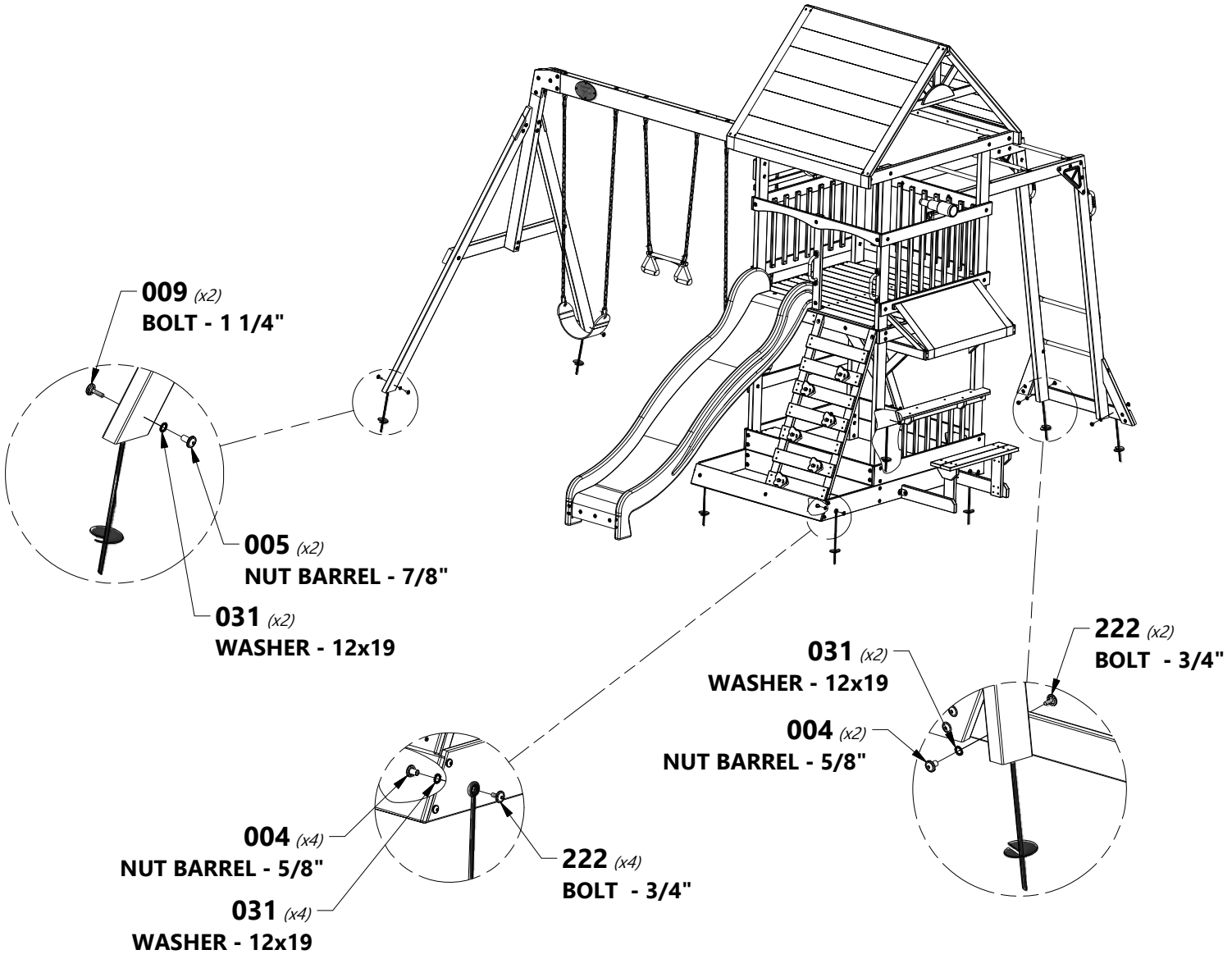

FINAL STEP

DOUBLE CHECK EVERY BOLT, SCREW AND NUT FOR TIGHTNESS. MAKE SURE EVERY BOARD IS SECURE AND MAKE SURE THE PLAY SET IS LEVEL.

ENJOY YOUR NEW PLAY SET!