Backyard DISCOVERY

POWER TOWER

Metal Play Set

Model: # 1755031

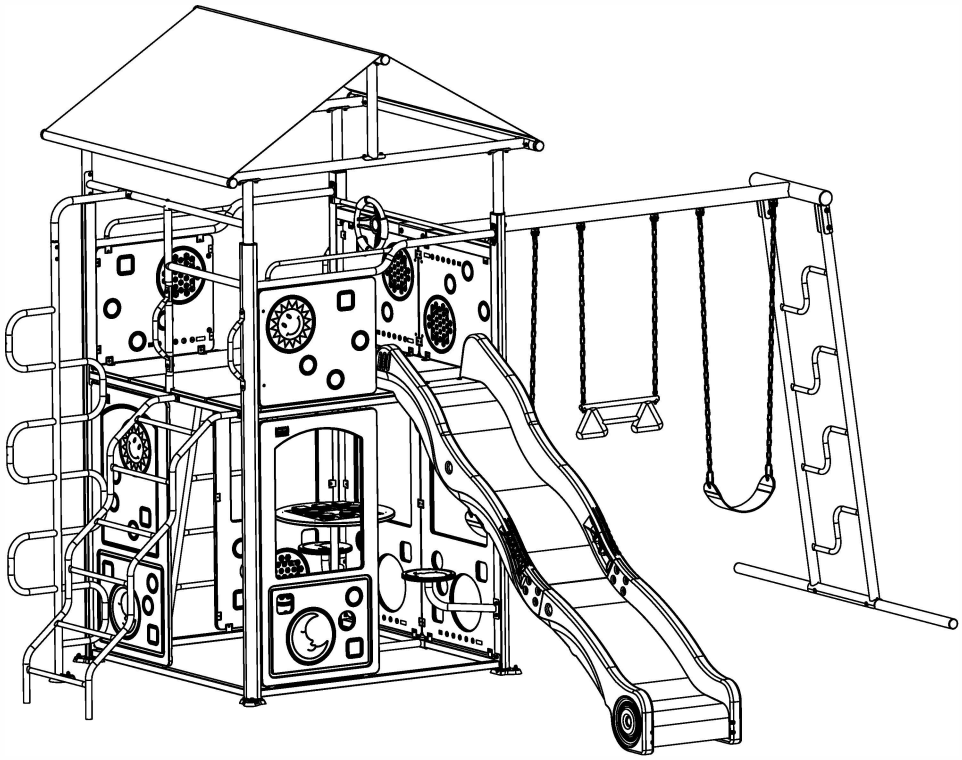

Owner's Manual
Frequently Asked Questions
Assembly Instructions
Warranty Information

Manufacturer: Backyard Discovery
3305 Airport Drive
Pittsburg, KS 66762
1-800-856-4445

Register your new swing set on-line @ www.backyarddiscovery.com
(you will also find any updates on assembly instructions and

information to order replacement parts)

Save this assembly manual for future reference in the event that you need to order replacement parts.

INS-1755031-A-Power Tower ENG 12/16/16

Made in China

Dear Customer:
Please read entire booklet completely before beginning the assembly process.

Equipment is recommended for use by ***children 3 to 10 years of age****. Structures are* ***not intended for public use. The Company does not warranty any of its residential structures subjected to commercial use such as: Daycare, Preschool, Nursery School, Recreational Park, or any similar Commercial Application.***

WARNING*: This Symbol points out important safety instructions which, if not followed, could endanger the personal safety of yourself and your children and/or damage your property. You MUST read and follow all instructions in this manual before attempting to use this playcenter.*

WARNING*:* ***Children must NOT use this playcenter until unit has been completely assembled and inspected by an adult to insure set has been properly installed and anchored.***

Please follow all recommendations below. ***Failure to do so may result in the warranty being void and/or safety violations that could result in serious injury****. This manual contains helpful information concerning Assembly Preparation, Installation Procedure, and Required Maintenance. Always keep the safety of your children in mind as your play structure is being built and as your children play on the set. Before your children play on the set please review the Operation Instructions with them to help ensure their safety.*

PLEASE RETAIN THESE INSTRUCTIONS FOR FUTURE REFERENCE. KEEP THEM IN A SAFE PLACE WHERE YOU CAN REFER TO THEM AS NEEDED. IN ORDER TO PROVIDE YOU WITH THE MOST EFFICIENT SERVICE, IT IS REQUIRED THAT YOU PROVIDE US WITH THE PART NUMBERS WHEN ORDERING PARTS.

For Your Records:
Please take time and fill out the information below. This information will be needed for warranty issues.
Where Purchased: _____
Date of Purchase: _____
Installation Date: _____
Installed by: _____
Tracking Number: _____

Staple Receipt Here

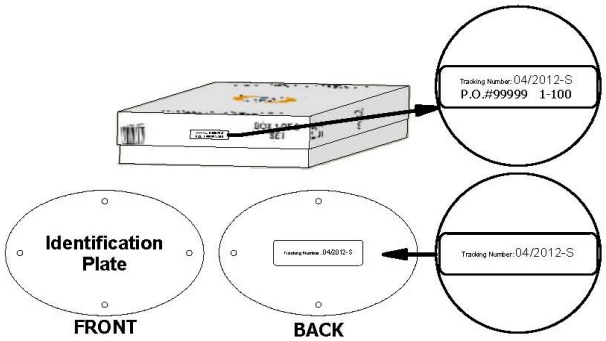

OR

Tracking Number

Vertical ID Plate

Tracking Number Reference Label
Tracking ID number on the carton and back of the ID plate or vertical ID plate are included for tracking purposes associated with warranty claims.

Please refer to the Assembly section of the Assembly Manual for Maximum Fall Height.

Positioning Your Playcenter

1. *The Playcenter is designed to be installed on a level surface* ***by an Adult with an Adult helper****. Place in a flat area of your yard to minimize ground preparation.*
2. *Choose a level location for the equipment. This can reduce the likelihood of the play set tipping over and loose-fill surfacing material washing away during heavy rains.*
3. *Place the equipment not less than* ***6 ft (1.8 m)*** *from any structure or obstruction such as a fence, garage, house, overhanging branches, laundry lines, or electrical wires.*
4. *Provide enough room so that the children can use the equipment safely. For example, for structures with multiple play activities, a slide should not exit in front of a swing.*
5. *It is a good idea to place your Playcenter in an area that is convenient for adults to watch children at play.*
6. *Create a site free of obstacles that could cause injuries – such as low overhanging tree branches, overhead wires, tree stumps and/or roots, large rocks, bricks and concrete. Additional suggestions in the Suggested Playground Surfacing Section.*
7. *Do not build your playset on top of surfacing material.*
8. *Locate bare metal platforms and slides out of direct sunlight to reduce the likelihood of serious burns. A slide that faces north will receive the least direct sunlight.*
9. *Separate active and quiet activities from each other. For example, locate sandboxes away from swings or use a guardrail or barrier to separate the sandbox from the movement of the swings.*

Suggested Playground Surfacing

- *Do not install home playground equipment over concrete, asphalt, packed earth, grass, carpet, or any other hard surface. A fall onto a hard surface can result in serious injury to the equipment user.*
- *Do not install loose fill surfacing over hard surfaces such as concrete or asphalt.*
- *Shredded bark mulch, wood chips, fine sand and fine gravel, are added as shock absorbing materials after assembly. If used properly these materials can absorb some of the impact of a child's fall.*
- *All surface material should extend a minimum of 6 feet in all directions around the play area.*
- *Do not apply playground surfacing until after the unit is completely constructed. Playset should not be built on top of surfacing.*
- *Use containment, such as digging out around the perimeter and/or lining the perimeter with landscape edging.*
- *Installations of rubber tiles or poured-in-place surfaces (other than loose-fill materials) generally require a professional and are not "do-it-yourself" projects.*
- *Shall use Playground Surfacing Materials (other than loose-fill material) which comply with the safety standard ASTM F1292 Standard Specification of Impact Attenuation of Surfacing Materials within the Use Zone of Playground Equipment.*

The following chart explains the fall height in feet from which a life threatening head injury would not be expected

Critical Heights in feet (m) of Tested Materials

Material	Uncompressed Depth			Compressed Depth
	6" (152mm)	9" (228mm)	12" (304mm)	to 9" (228mm)
Wood Chips	7' (2.13m)	10' (3.05m)	11' (3.35m)	10' (3.05m)
Double-Shredded bark mulch	6' (1.83m)	10' (3.05m)	11' (3.35m)	7' (2.13m)
Engineered Wood Fibers	6' (1.83m)	7' (2.13m)	>12' (3.66m)	6' (1.83m)
Fine Sand	5' (1.52m)	5' (1.52m)	9' (2.74m)	5' (1.52m)
Coarse Sand	5' (1.52m)	5' (1.52m)	6' (1.83m)	4' (1.22m)
Fine Gravel	5' (1.52m)	7' (2.13m)	10' (3.05m)	6' (1.83m)
Medium Gravel	5' (1.52m)	5' (1.52m)	6' (1.83m)	5' (1.52m)
Shredded Tires*	10-12' (3.0-3.6m)	N/A	N/A	N/A

*This data is from tests conducted by independent testing laboratories on a 6-inch depth of uncompressed shredded tire samples produced by four manufacturers. The tests reported critical heights, which varied from 10 feet to greater than 12 feet. It is recommended that persons seeking to install shredded tires as a protective surface request test data from the supplier showing the critical height of the material when it was tested in accordance with ASTM F1292.

Operating Instructions:

***NOTE**: Your children's safety is our #1 concern. Observing the following statements and warnings reduces the likelihood of serious or fatal injury. Please review these safety rules regularly with your children.*

1. *This Playcenter is designed for specific number of occupants whose combined weight **should not exceed** a designated weight on the elevated floor or the swing area, the total Unit capacity is outlined in the Basic Setup Dimensions section of instruction manual. The maximum fall height and recommended play area is also available in the Basic Setup Dimensions section of the manual for the specific unit.*
2. *On-site adult supervision is **required**.*
3. *Instruct children **not** to walk close to, in front of, behind, or between moving swings or other moving playground equipment.*
4. *Instruct children to sit in and **never** stand on swings*
5. *Instruct children **not** to twist the chains and ropes and not to loop them over the top support bar, since this may reduce the strength of the chain or rope.*
6. *Instruct children **not** to jump from swings or other playground equipment in motion.*
7. *Instruct children to **not to push** empty seats. The seat may hit them and cause serious injury.*
8. *Instruct and teach children to sit in the center of the swings with their full weight on the seats.*
9. *Instruct children **not** to use the equipment in a manner other than intended.*
10. *Instruct children to **always** go down slides feet first. Never slide head first.*
11. *Instruct children to **look** before they slide to make sure no one is at the bottom.*
12. *Instruct children to **never** run up a slide, as this increases their chances of falling.*
13. *The parents should **dress children appropriately**. (Examples would include the use of well-fitting shoes and the avoidance of ponchos, scarfs, and other loose-fitting clothing that is potentially hazardous while using equipment).*
14. *Instruct children **not** to climb when the equipment is wet.*
15. *Instruct children to **never** jump from a fort deck. They should always use the ladder, ramp or slide.*
16. *Instruct children to **never** crawl or walk across the top of monkey bars.*
17. *Instruct children to **never** crawl on top of a fort roof.*

18. *Verify that any suspended climbing ropes, chain, or cable are secured at both ends and that they cannot be looped back on it.*
19. *Instruct children **not** to attach items to the playground equipment that are not specifically designed for use with the equipment, such as, but not limited to, jump ropes, clothesline, pet leashes, cables and chain as they may cause a strangulation hazard.*
20. *Instruct children to **never** wrap their legs around swing chain.*
21. *Instruct children to **never** slide down the swing chain.*
22. *Instruct children to remove their bike or other sports helmet before playing on playground equipment.*

Maintenance Instructions:

At the beginning of each play season:

• Tighten all hardware.
• Lubricate all metallic moving parts per manufacturer's instructions.
• Check all protective coverings on bolts, pipes, edges, and corners. Replace if they are loose, cracked, or missing.
• Check all moving parts including swing seats, ropes, cables, and chains for wear, rust, or other deterioration. Replace as needed.
• Check metal parts for rust. If found, sand and repaint using a non Lead-based paint meeting the requirements of 16 CFR 1303.
• Check all wood members for deterioration and splinters. Sand down splinters and replace deteriorating wood members.
• Reinstall any plastic parts, such as swing seats or any other items that were removed for the cold season.
• Rake and check depth of loose fill protective surfacing materials to prevent compaction and to maintain appropriate depth. Replace as necessary.

Twice a month during play season:

• Tighten all hardware.
• Check all protective coverings on bolts, pipes, edges, & corners. Replace if they are loose, cracked, or missing.
• Rake and check depth of loose fill protective surfacing materials to prevent compaction and to maintain appropriate depth. Replace as necessary.

Once a month during play season:

• Lubricate all metallic moving parts per manufacturer's instructions.
• Check all moving parts including swing seats, ropes, cables, and chains for wear, rust, or other deterioration. Replace as needed.

At the end of each play season or when the temperature drops below 32° F:

• Remove plastic swing seats and other items as specified by the manufacturer and take indoors or do not use.
• Rake and check depth of loose fill protective surfacing materials to prevent compaction and to maintain appropriate depth. Replace as necessary.

Owners shall be responsible for maintaining the legibility of the warning labels.

Additional Maintenance:

- *Check the swing beam and hardware every two weeks . It is particularly important that this procedure be followed at the beginning of each season.*

- *Assembling and maintaining the playset on a level location is very important. As your children play, your playset will slowly dig its way into the soil, and it is very important that it settles evenly. Make sure the playset is level and true one each year or at the beginning of each play season.*

Disposal Instructions:

When the Playcenter use is no longer desired, it should be disassembled and disposed of in such a way that no unreasonable hazards will exist at the time the unit is discarded.

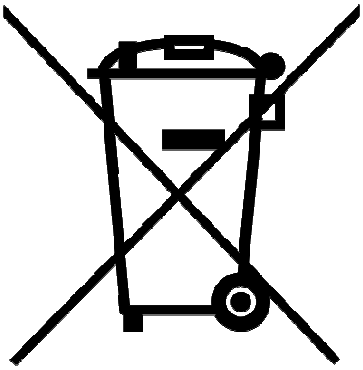

Third Party Assembly:

Customer may, in their sole discretion, elect to use a third party person or service to assemble this product. Backyard Discovery assumes no responsibility or liability for any charge incurred by the Customer for any assembly services'.
Please see our warranty for more information about damaged and missing part replacement coverage. Backyard Discovery will not reimburse Customer for the price of parts purchased.

APPENDIX A

Information on Playground Surfacing Materials:

The following information is from the ***United States Consumer Product Safety Commission's Information Sheet for playground surfacing material;*** *also see the following website for additional information:* ***www.cpsc.gov/cpscpub/pubs/323.html****.*

X3. SECTION 4 OF THE CONSUMER PRODUCT SAFETY COMMISSION'S OUTDOOR HOME PLAYGROUND SAFETY HANDBOOK[9]

X3.1 Select Protective Surfacing—One of the most important things you can do to reduce the likelihood of serious head injuries is to install shock-absorbing protective surfacing under and around your play equipment. The protective surfacing should be applied to a depth that is suitable for the equipment height in accordance with ASTM Specification F 1292. There are different types of surfacing to choose from; whichever product you select, follow these guidelines:

X3.1.1 Loose-Fill Materials:

X3.1.1.1 Maintain a minimum depth of 9 inches of loose-fill materials such as wood mulch/chips, engineered wood fiber (EWF), or shredded/recycled rubber mulch for equipment up to 8 feet high; and 9 inches of sand or pea gravel for equipment up to 5 feet high. NOTE: An initial fill level of 12 inches will compress to about a 9-inch depth of surfacing overtime. The surfacing will also compact, displace, and settle, and should be periodically refilled to maintain at least a 9-inch depth.

X3.1.2 Use a minimum of 6 inches of protective surfacing for play equipment less than 4 feet in height. If maintained properly, this should be adequate. (At depths less than 6 inches, the protective material is too easily displaced or compacted.) NOTE: Do not install home playground equipment over concrete, asphalt, or any other hard surface. A fall onto a hard surface can result in serious injury to the equipment user. Grass and dirt are not considered protective surfacing because wear and environmental factors can reduce their shock absorbing effectiveness. Carpeting and thin mats are generally not adequate protective surfacing. Ground level equipment such as a sandbox, activity wall, playhouse or other equipment that has no elevated play surface – does not need any protective surfacing.

X3.1.3 Use containment, such as digging out around the perimeter and/or lining the perimeter with landscape edging. Don't forget to account for water drainage.

X3.1.3.1 Check and maintain the depth of the loose-fill surfacing material. To maintain the right amount of loose-fill materials, mark the correct level on play equipment support posts. That way you can easily see when to replenish and/or redistribute the surfacing.

X3.1.3.2 ***Do not*** *install loose-fill surfacing over hard surfaces such as concrete or asphalt.*

X3.1.4 Poured-In-Place Surfaces or Pre-Manufactured Rubber Tiles — You may be interested in using surfacing other than loose-fill materials – like rubber tiles or poured-in-place surfaces.

X3.1.4.1 Installations of these surfaces generally require a professional and are not "do-it-yourself" projects.

X3.1.4.2 Review surface specification before purchasing this type of surfacing. Ask the installer/manufacturer for a report showing that the product has been tested to the following safety standard: ASTM F 1292 Standard Specification for Impact Attenuation of Surfacing Materials within the Use Zone of Playground Equipment. This report should show the specific height for which the surface is intended to protect against serious head injury. This height should be equal to or greater than the fall height – vertical distance between a designated play surface (elevated surface for standing, sitting, or climbing) and the protective surfacing below – of your play equipment.

X3.1.4.3 Check the protective surfacing frequently for wear.

X3.1.5 Placement — Proper placement and maintenance of protective surfacing is essential. Be sure to:

X3.1.5.1 Extend surfacing at least 6 feet from the equipment in all directions.

X3.1.5.2 For to-fro swings, extend protective surfacing in front of and behind the swing to a distance equal to twice the height of the top bar from which the swing is suspended.

[9] This information has been extracted from the CPSC publications "Playground Surfacing — Technical Information Guide" and "Handbook for Public Playground Safety." Copies of these reports can be obtained by sending a postcard to the: Office of Public Affairs, U.S. Consumer Product Safety Commission, Washington, D.C., 20207 or call the toll-free hotline: 1-800-638-2772.

The American Society for Testing and Materials takes no position respecting the validity of any parent right asserted in connection with any item mentioned in this standard. Users of this standard are expressly advised that determination of the validity of any such parent rights, and the risk of infringement of such rights, are entirely their own responsibility.

The standard is subject to revision at any time by the responsible technical committee and must be reviewed every five years and if not revised, either approved or withdrawn. Your comments are invited either for revision of this standard or for additional standards and should be addressed to ASTM Headquarters. Your comments will receive careful consideration at a meeting of the responsible technical committee, which you may attend. If you feel that your comments have not received a fair hearing you should make your views known to the ASTM Committee on Standards. 100 Barr Harbor Drive, West Conshohocken, PA 19428.

Basic Setup Dimensions

Place the set on level ground, not less than 6 ft [2 m] from any structure or obstruction such as a fence, garage, house, overhanging branches, laundry lines, or electrical wires.

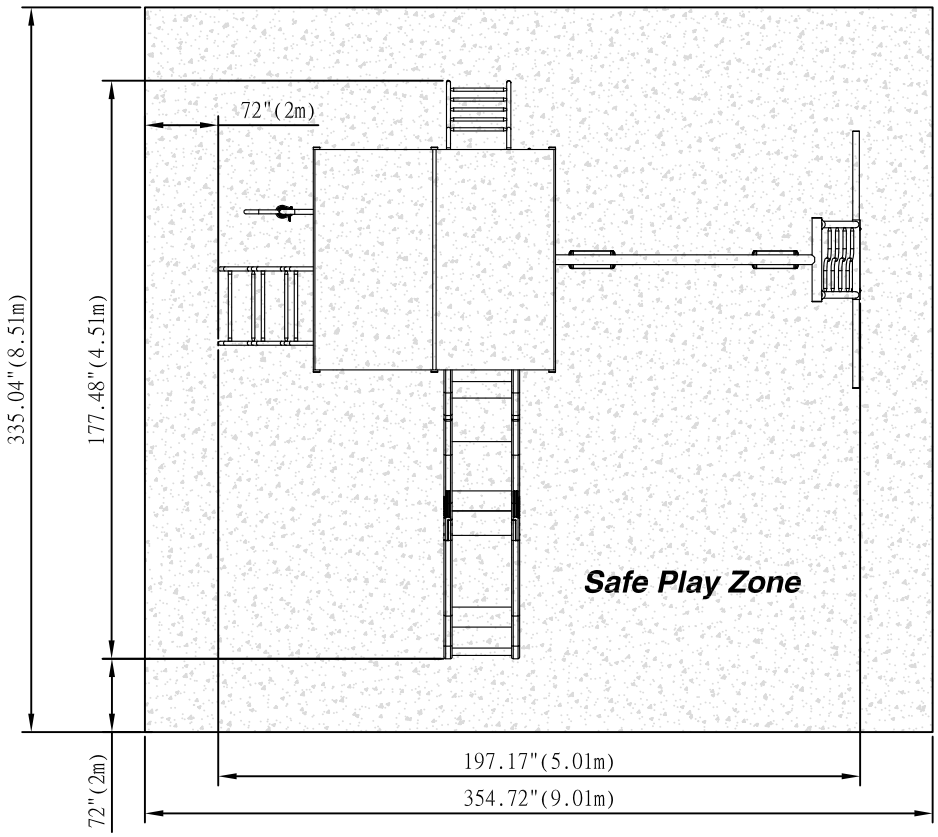

Safe play height: 128.50"[3.26m]
Maximum fall height: 85.71"[2.18m]

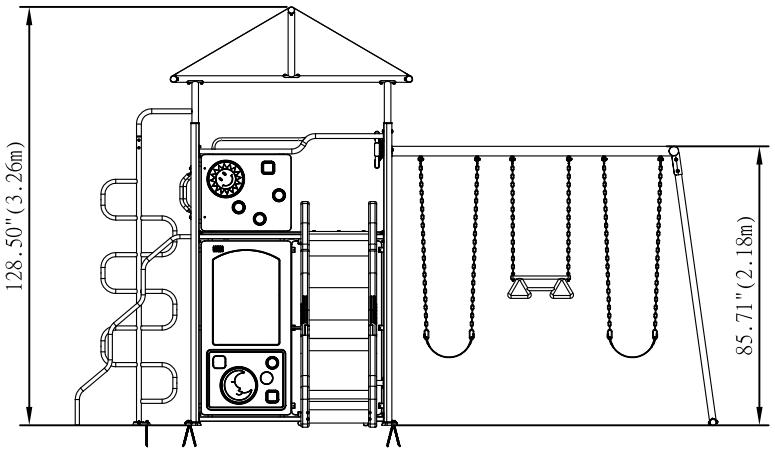

General Information:
Your set has been designed and engineered for children only and for residential use only.
A maximum of 150 lbs. per child is recommended forplay activities designed for individual use.
A maximum of 120 lbs. per child is recommended forplay activities designed for multiple child use.
A maximum of 9 children is recommended for this swing set.

Important Assembly Notes

1) While assembling unit, take time before and after each phase to make sure fort is level. If fort is not level, assembly will be difficult and improper assembly may result. Extra care must be taken to insure the fort is square.
2) Tighten bolts securely, tighten nuts on bolts flush to the tube or member, and place caps over exposed bolts snug to the nut.
3) Pay close attention to the ITEMS NEEDED FOR EACH PHASE. They can be a valuable aid when sorting your wood and hardware. Assembly will be made easier if items are sorted by phase.
4) Pay close attention to make sure you are using the correct hardware in the correct phases. Using incorrect hardware may result in improper assembly.
5) Whenever a T-nut is used, follow these directions. Place T-nut in pre-drilled hole. Tap in with hammer. Place bolt with washers in the opposite side. Hand tighten to make sure the bolt is in the T-nut. DO NOT over tighten.
6) Read the steps of each phase thoroughly. The written steps may include important information not shown in the illustrations.

Tools Required for Installation:

(These are the tools that are generally required for assembly of our outdoor products. These tools are not included with the outdoor product purchase.)

(Tape Measure)

(3/8" Drill Bit)

(Drill Attachments: Phillips Head)

(Cordless Drill or Electric Drill)

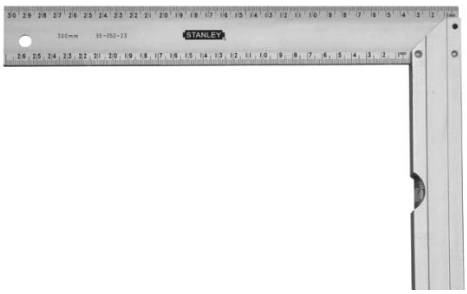

(Square)

(Open end Wrench 1/2" &17mm)

(An Adult w/ two Adult Helper)

(Claw Hammer)

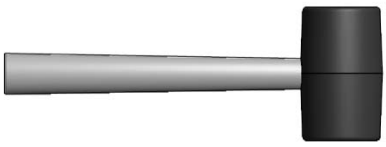

(Rubber Mallet - Optional)

(Level 24")

(Ladder)

Parts Identification

Metal Components
(NOT TO SCALE)

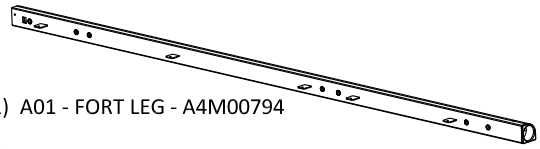

(1) A01 - FORT LEG - A4M00794

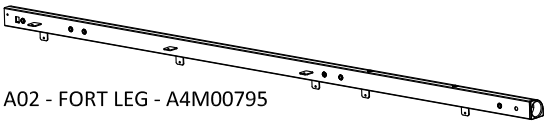

(1) A02 - FORT LEG - A4M00795

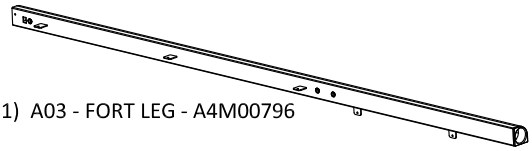

(1) A03 - FORT LEG - A4M00796

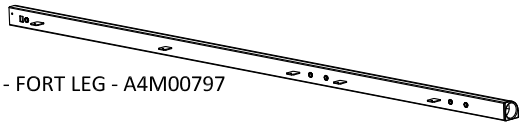

(1) A04 - FORT LEG - A4M00797

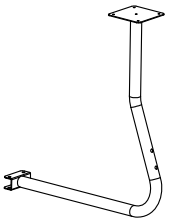

(1) A05 - TABLE LEG ASSEMBLY - A4M00811

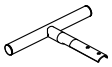

(1) A06 - TABLE LEG SUPPORT - A4M00812

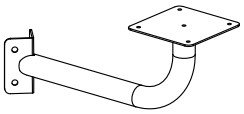

(2) A07 - CHAIR LEG ASSEMBLY - A4M00810

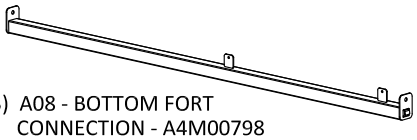

(3) A08 - BOTTOM FORT CONNECTION - A4M00798

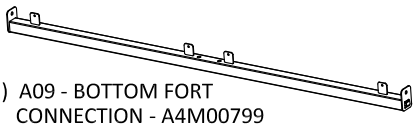

(1) A09 - BOTTOM FORT CONNECTION - A4M00799

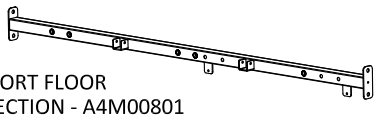

(1) A10 - FORT FLOOR CONNECTION - A4M00801

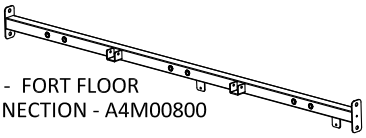

(1) A11 - FORT FLOOR CONNECTION - A4M00800

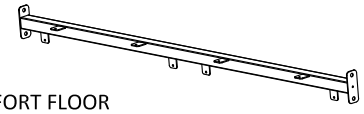

(1) A12 - FORT FLOOR CONNECTION - A4M00803

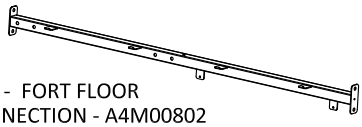

(1) A13 - FORT FLOOR CONNECTION - A4M00802

(2) A14 - FORT FLOOR SUPPORT -A4M00805

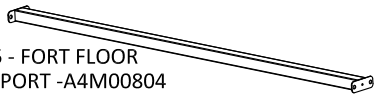

(3) A15 - FORT FLOOR SUPPORT -A4M00804

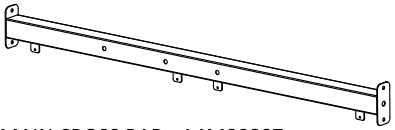

(1) A16 - MAIN CROSS BAR - A4M00807

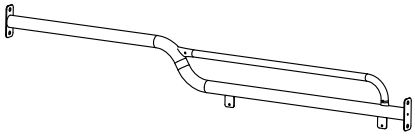

(2) A17 - S-SHAPED HANDRAIL SUPPORT - A4M00806

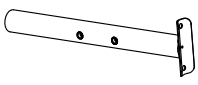

(2) A18 - VERTICAL ROOF SUPPORT - A4M00778

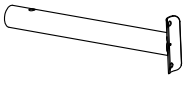

(2) A19 - VERTICAL ROOF SUPPORT - A4M00777

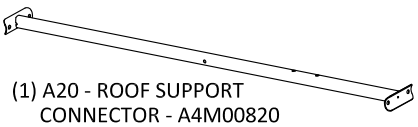

(1) A20 - ROOF SUPPORT CONNECTOR - A4M00820

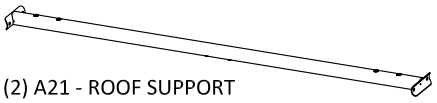

(2) A21 - ROOF SUPPORT CONNECTOR - A4M00779

Parts Identification

Metal Components
(NOT TO SCALE)

(2) A22 - VERTICAL TARP SUPPORT - A4M00780

(3) A23 - SIDE TARP SUPPORT - A4M00781

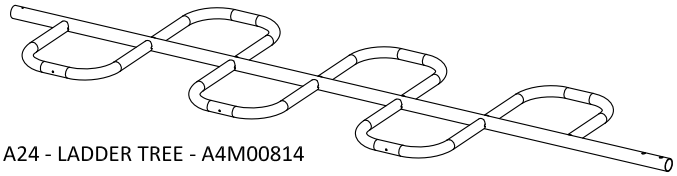

(1) A24 - LADDER TREE - A4M00814

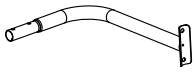

(1) A25 - LADDER TREE L-TUBE - A4M00813

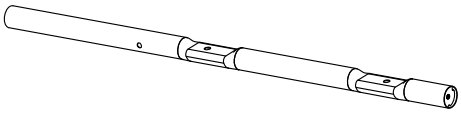

(1) A26 - HANDRAIL VERTICAL TUBE - A4M00808

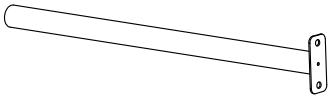

(1) A27 - HANDRAIL CROSS TUBE - A4M00809

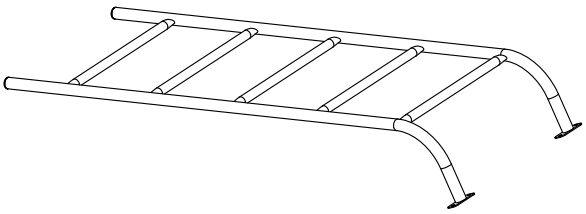

(1) A28 - ENTRY LADDER - A4M00784

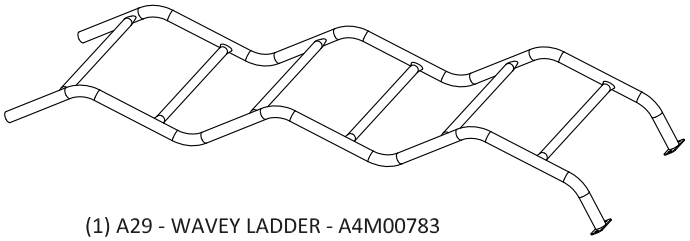

(1) A29 - WAVEY LADDER - A4M00783

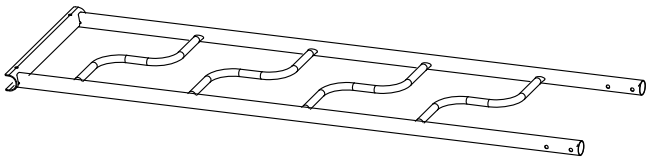

(1) A30 - SWING BEAM UPRIGHT - A4M00785

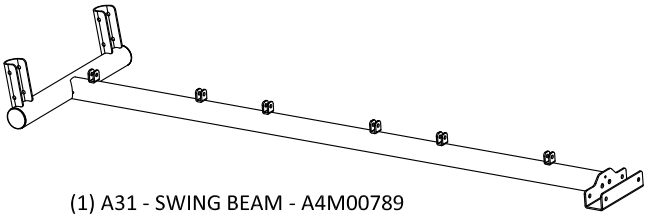

(1) A31 - SWING BEAM - A4M00789

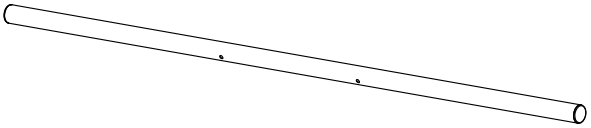

(1) A32 - SWING BEAM BASE - A4M00815

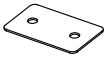

(3) A33 - FORT WALL CONNECTOR - A4M00816

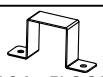

(12) A34 - FLOOR SUPPORT BRACKET - A4M00817

(8) A35 - L BRACKET - A4M00818

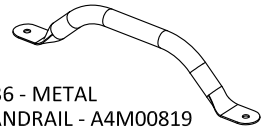

(4) A36 - METAL HANDRAIL - A4M00819

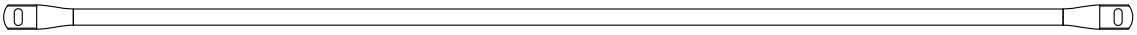

(1) A37 - CROSS BAR - A4M00888

Parts Identification

Plastic Components

(NOT TO SCALE)

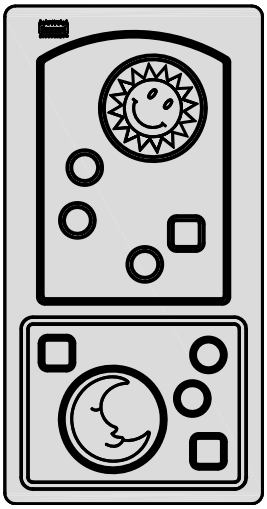

(1) B01 - BOTTOM WALL PANEL-SOLID - A6P00209

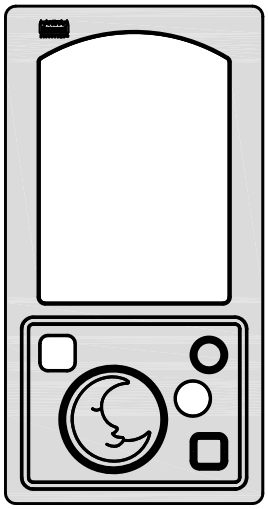

(2) B02 - BOTTOM WALL PANEL-WINDOW - A6P00219

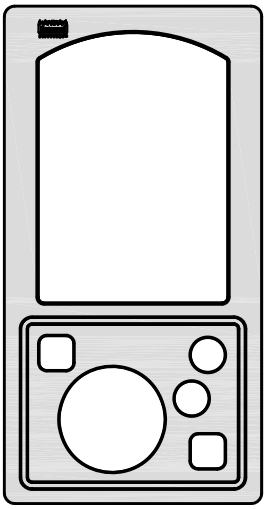

(2) B03 - BOTTOM WALL PANEL-WINDOW - A6P00220

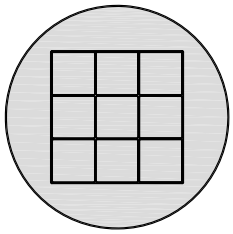

(1) B04 - GAME TABLE TOP - A6P00208

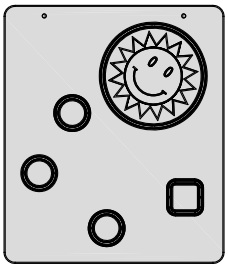

(4) B05 - UPPER WALL PANEL - A6P00222

(1) B06 - FORT FLOOR MIDDLE - A6P00225

(2) B07 - FORT FLOOR SIDE - A6P00226

(2) B08 - SEAT WITH MOON - A6P00221

(5) B09 - ROUND GAME PART - A6P00201

(5) B10 - SQUARE GAME PART - A6P00202

Parts Identification

Hardware

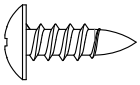

(118) C01 - PAN HEAD PHILLIPS SELF-TAPPING SCREW 5x15mm - H100592

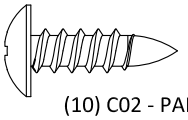

(10) C02 - PAN HEAD PHILLIPS SELF-TAPPING SCREW 6X20mm - H100618

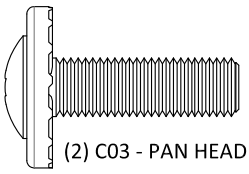

(2) C03 - PAN HEAD TORX NY-LOCK SCREW - H100008

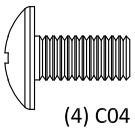

(4) C04 - PAN HEAD PHILLIPS SCREW 1/4x12.7mm - H100598

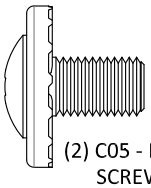

(2) C05 - PAN HEAD TORX NY-LOCK SCREW 5/16x12.7mm - H100599

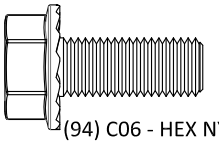

(94) C06 - HEX NY-LOCK SCREW WITH PAD 5/16x20mm - H100596

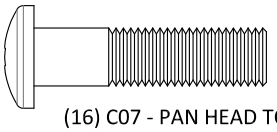

(16) C07 - PAN HEAD TORX SEMI-THREAD SCREW 5/16x31.7mm - H100605

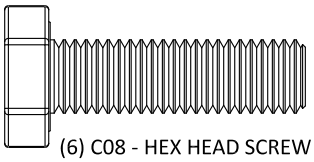

(6) C08 - HEX HEAD SCREW M10x35mm - H100615

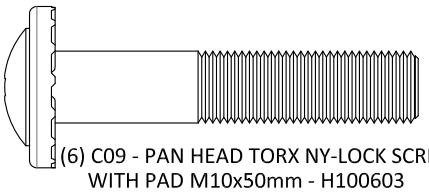

(6) C09 - PAN HEAD TORX NY-LOCK SCREW WITH PAD M10x50mm - H100603

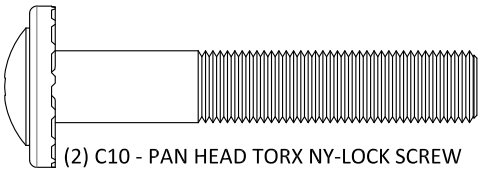

(2) C10 - PAN HEAD TORX NY-LOCK SCREW M10x58mm - H100602

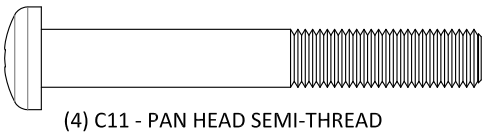

(4) C11 - PAN HEAD SEMI-THREAD SCREW 5/16x60mm - H100601

Parts Identification

Hardware

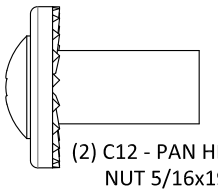

(2) C12 - PAN HEAD TORX NY-LOCK NUT 5/16x19.1mm - H100600

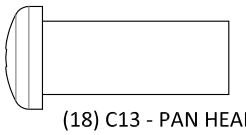

(18) C13 - PAN HEAD TORX NUT 5/16x25.4mm - H100606

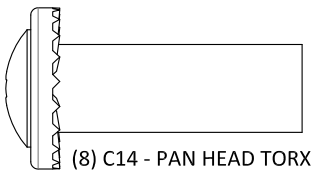

(8) C14 - PAN HEAD TORX NY-LOCK NUT WITH PAD M10x34mm - H100604

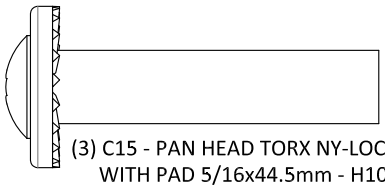

(3) C15 - PAN HEAD TORX NY-LOCK NUT WITH PAD 5/16x44.5mm - H100620

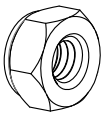

(6) C16 - HEX NUT M10 - H100616

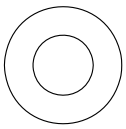

(121) C17 - STEEL WASHER 8.2x16mm - H100608

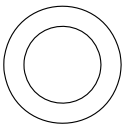

(23) C18 - STEEL WASHER 10.5x16mm - H100607

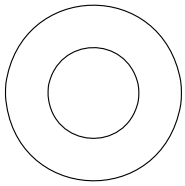

(22) C19 - STEEL WASHER 12.4x24mm - H100609

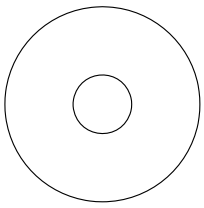

(1) C20 - STEEL WASHER 8.0X26.6mm - H100619

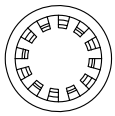

(121) C21 - STAR WASHER 8.4x14.5mm - H100610

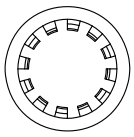

(23) C22 - STAR WASHER 3/8 - H100611

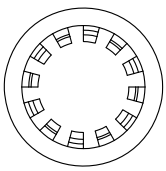

(16) C23 - STAR WASHER 12.4x21.6mm - H100612

Parts Identification

Accessories

(NOT TO SCALE)

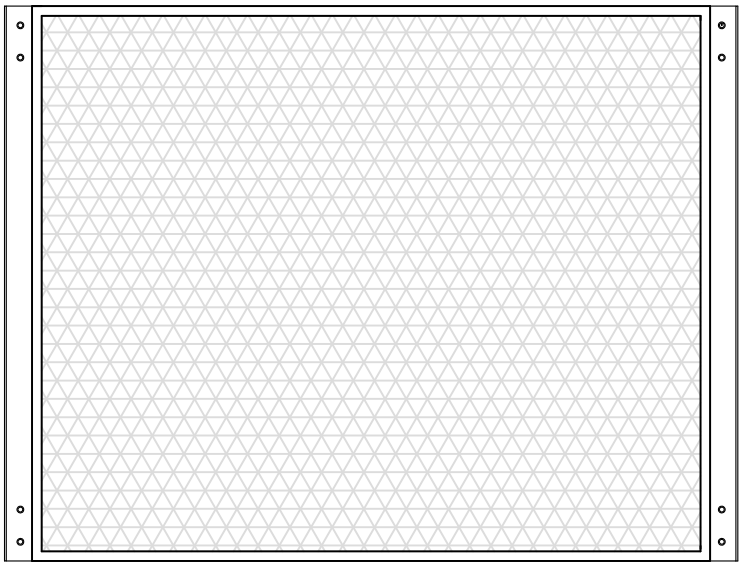

(1) D01 - TARP - A6P00203

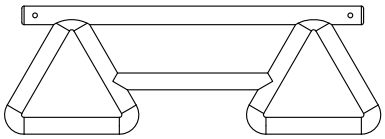

(1) D03 - VALUE TRAPEZE- A6P00034

(2) D02 - CHAIN GREEN 31"- A100177

(2) D05 - YELLOW SWING SEAT - A100171

(4) D04 - CHAIN GREEN 57"- A100047

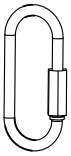

(6) D06 - QUICK LINK - A100069

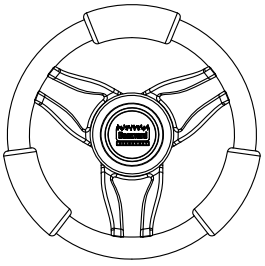

(1) D07 - STEERING WHEEL - A100105

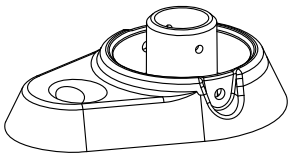

(1) D08 - ROUND TUBE FOOT - A6P00190

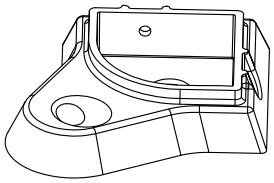

(4) D09 - FAN TUBE FOOT - A6P00191

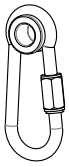

(6) D10 - SWING HANGER LINK - A6P00215

(2) D11 - PLASTIC TUBE SQUARE - A6P00192

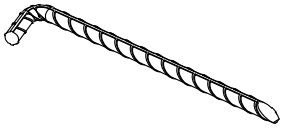

(5) D12 - METAL GROUND STAKE - A4M00741

Parts Identification

Accessories

(NOT TO SCALE)

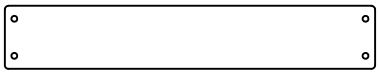

(1) E01 - SLIDE BED SUPPORT - W100935

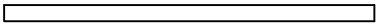

(4) E02 - SLIDE SUPPORT TUBE - A100034

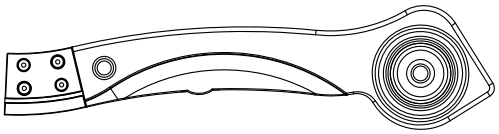

(1) E03 - SLIDE RAIL 10' BOTTOM LEFT GREEN - A100030

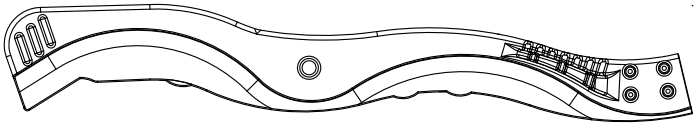

(1) E04 - SLIDE RAIL 10' TOP LEFT GREEN - A100032

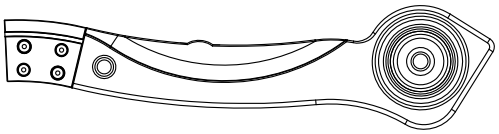

(1) E05 - SLIDE RAIL 10' BOTTOM RIGHT GREEN - A100031

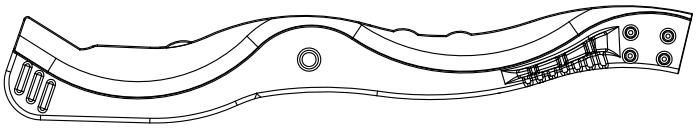

(1) E06 - SLIDE RAIL 10' TOP RIGHT GREEN - A100033

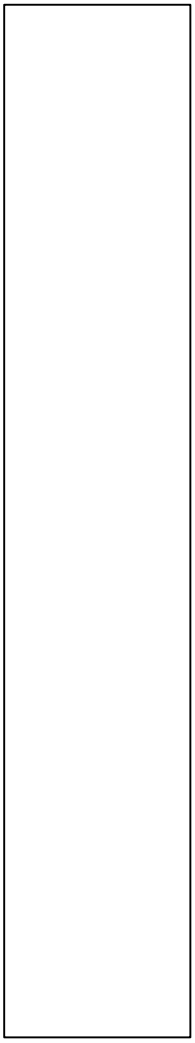

(1) E07 - SLIDE BED 10' YELLOW - A100197

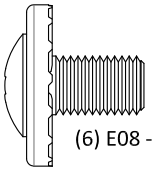

(6) E08 - BOLT WH 5/16x1/2 - H100115

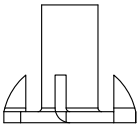

(3) E13 - T-NUT 5/16 - H100074

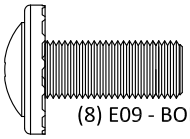

(8) E09 - BOLT WH 5/16x3/4 - H100222

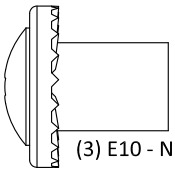

(3) E10 - NUT BARREL WH 5/16x5/8 - H100004

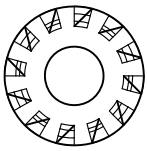

(8) E14 - WASHER LOCK EXT 8x19 - H100030

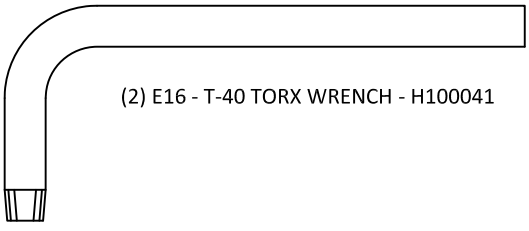

(2) E16 - T-40 TORX WRENCH - H100041

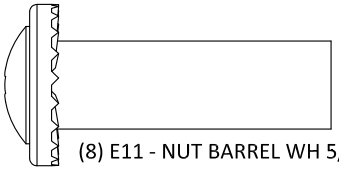

(8) E11 - NUT BARREL WH 5/16x1-1/2 - H100006

(38) E12 - SCREW PFH 8x2-1/2 - H100090

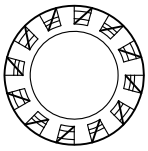

(3) E15 - WASHER LOCK EXT 12x19 - H100031

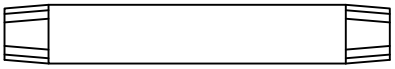

(2) E17 - T-40 TORX BIT - H100042

STEP 1

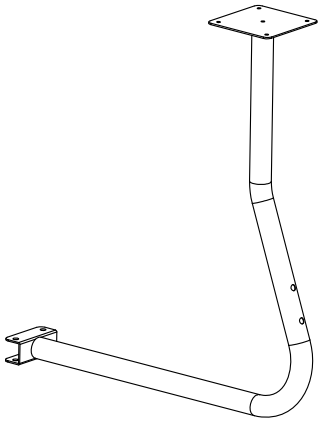

(1) A05 - TABLE LEG ASSEMBLY - A4M00811

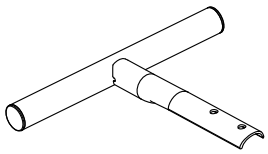

(1) A06 - TABLE LEG SUPPORT - A4M00812

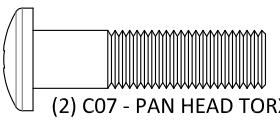

(2) C07 - PAN HEAD TORX SEMI-THREAD SCREW 5/16x31.7mm - H100605

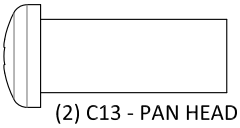

(2) C13 - PAN HEAD TORX NUT 5/16x25.4mm - H100606

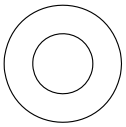

(2) C17 - STEEL WASHER 8.2x16mm - H100608

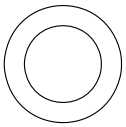

(2) C18 - STEEL WASHER 10.5x16mm - H100607

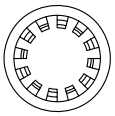

(2) C21 - STAR WASHER 8.4x14.5mm - H100610

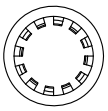

(2) C22 - STAR WASHER 3/8 - H100611

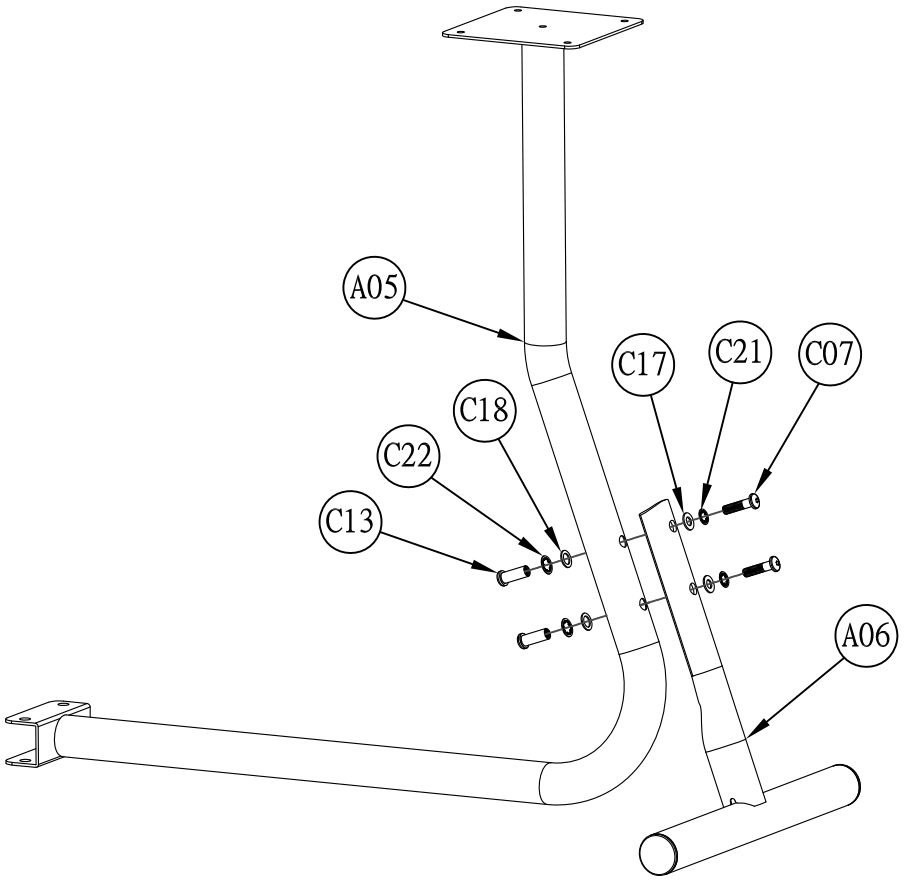

STEP 2

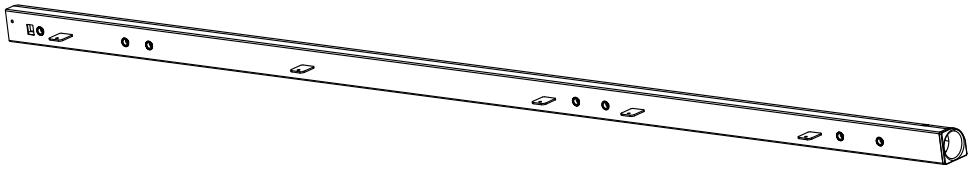

(1) A01 - FORT LEG - A4M00794

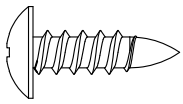

(4) C02 - PAN HEAD PHILLIPS SELF-TAPPING SCREW 6X20mm - H100618

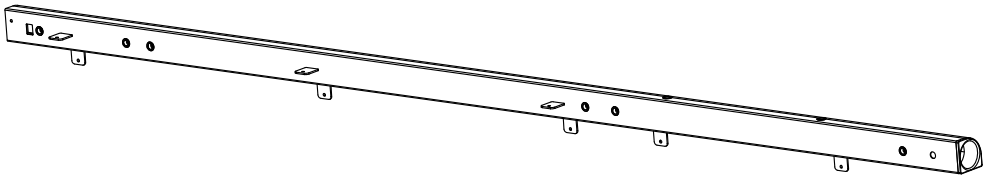

(1) A02 - FORT LEG - A4M00795

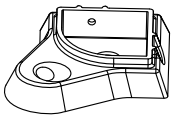

(2) D09 - FAN TUBE FOOT - A6P00191

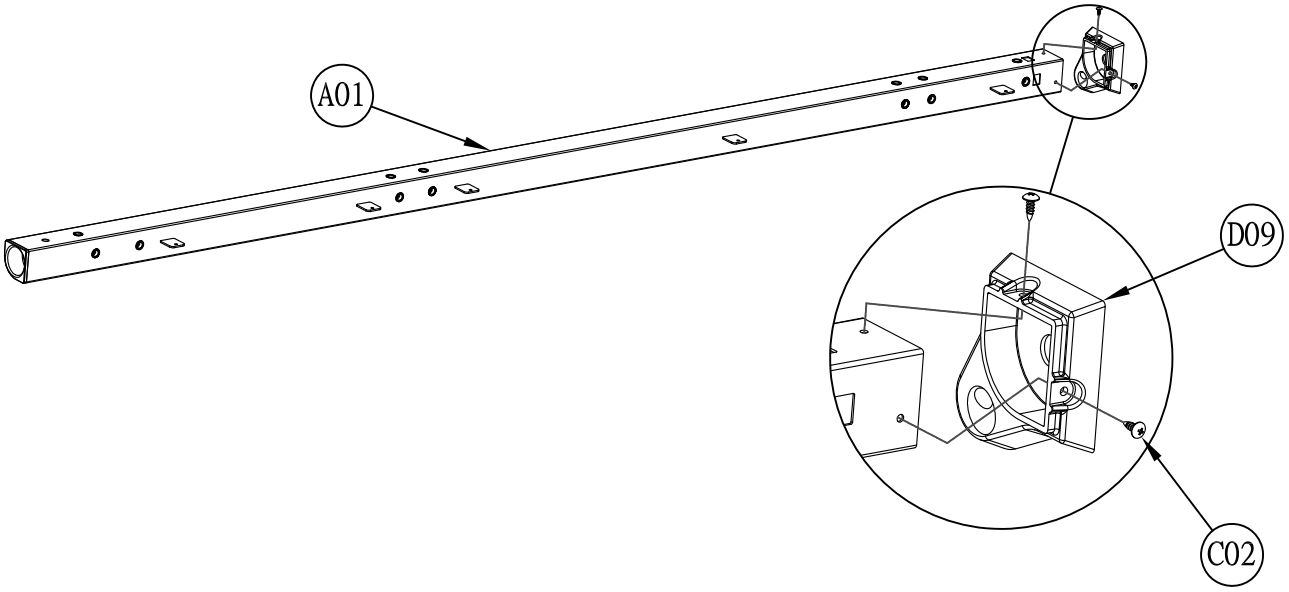

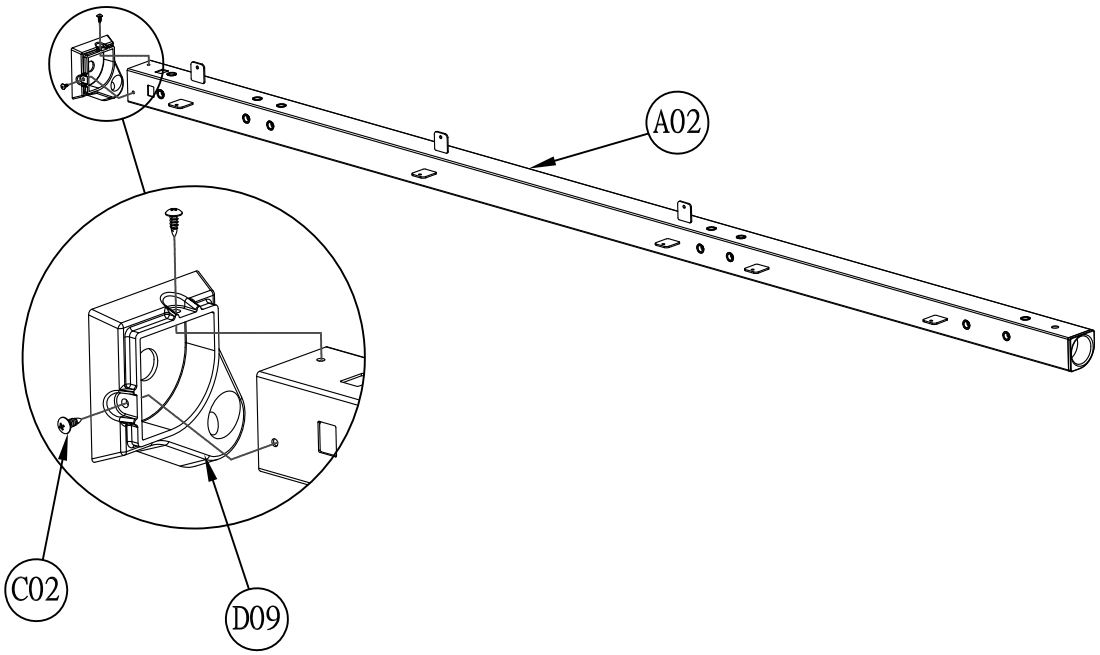

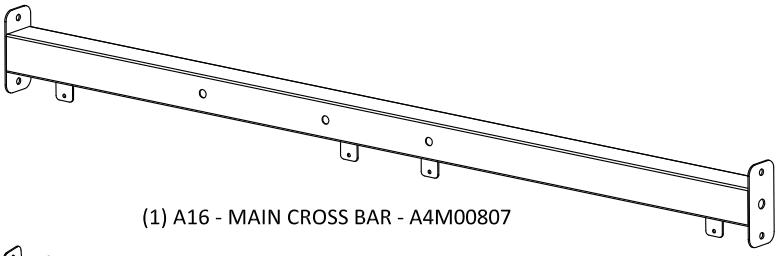

(1) A16 - MAIN CROSS BAR - A4M00807

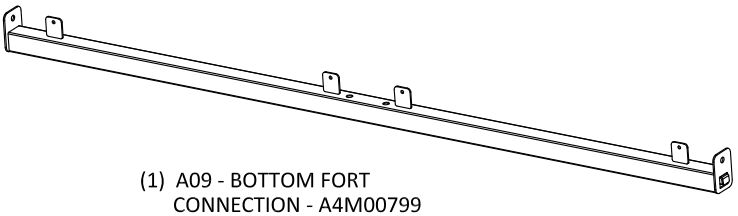

(1) A09 - BOTTOM FORT CONNECTION - A4M00799

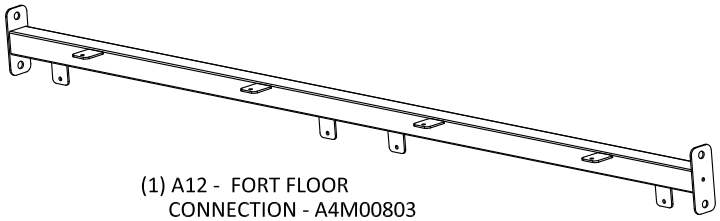

(1) A12 - FORT FLOOR CONNECTION - A4M00803

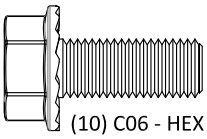

(10) C06 - HEX NY-LOCK SCREW WITH PAD 5/16x20mm - H100596

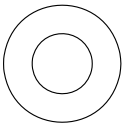

(10) C17 - STEEL WASHER 8.2x16mm - H100608

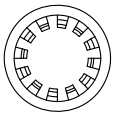

(10) C21 - STAR WASHER 8.4x14.5mm - H100610

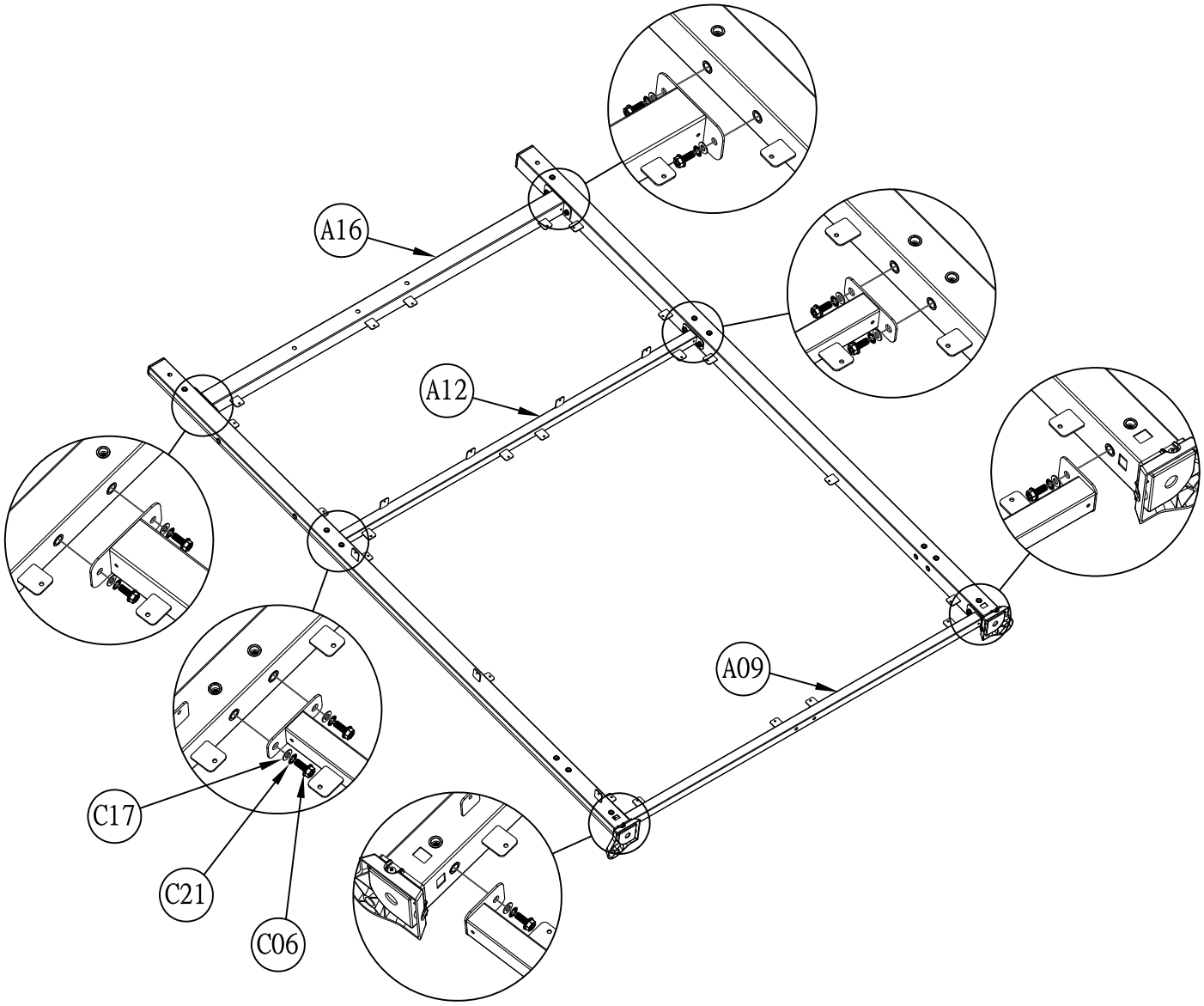

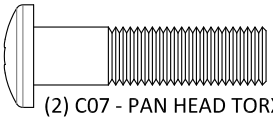

(2) C07 - PAN HEAD TORX SEMI-THREAD SCREW 5/16x31.7mm - H100605

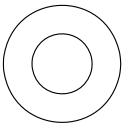

(2) C17 - STEEL WASHER 8.2x16mm - H100608

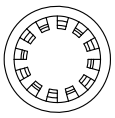

(2) C21 - STAR WASHER 8.4x14.5mm - H100610

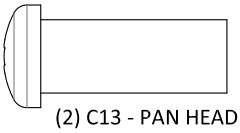

(2) C13 - PAN HEAD TORX NUT 5/16x25.4mm - H100606

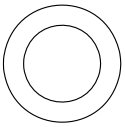

(2) C18 - STEEL WASHER 10.5x16mm - H100607

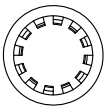

(2) C22 - STAR WASHER 3/8 - H100611

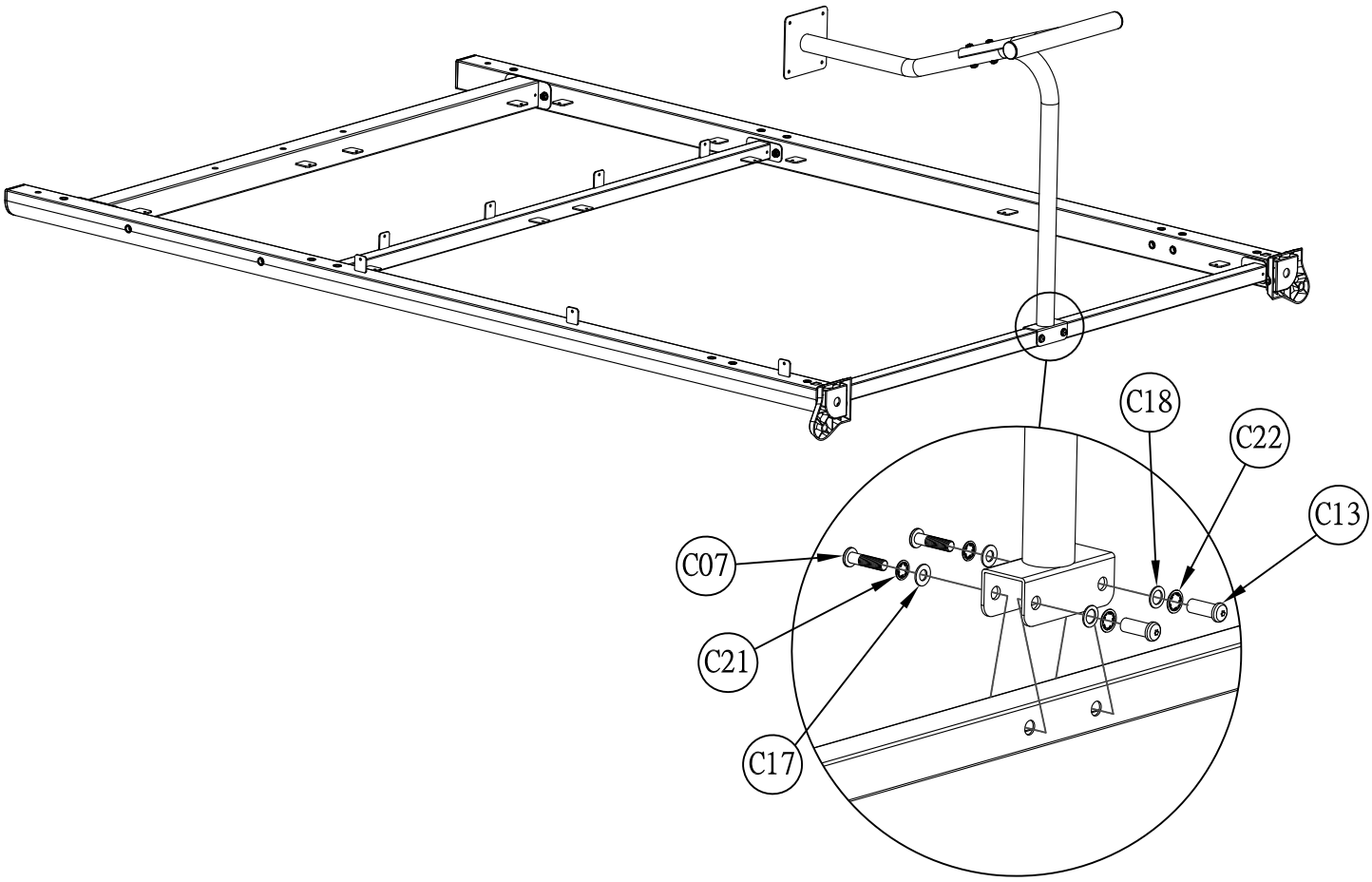

STEP 3

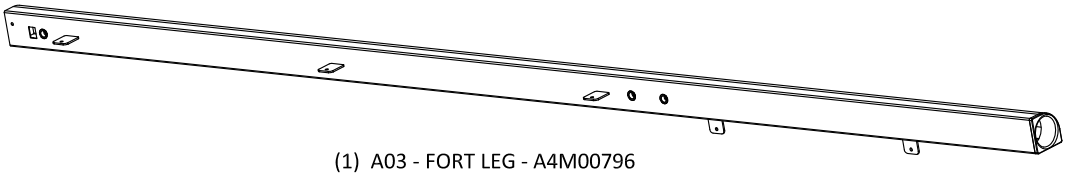

(1) A03 - FORT LEG - A4M00796

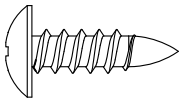

(4) C02 - PAN HEAD PHILLIPS SELF-TAPPING SCREW 6X20mm - H100618

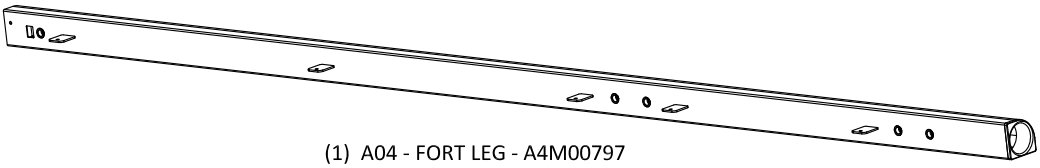

(1) A04 - FORT LEG - A4M00797

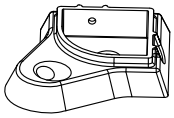

(2) D09 - FAN TUBE FOOT - A6P00191

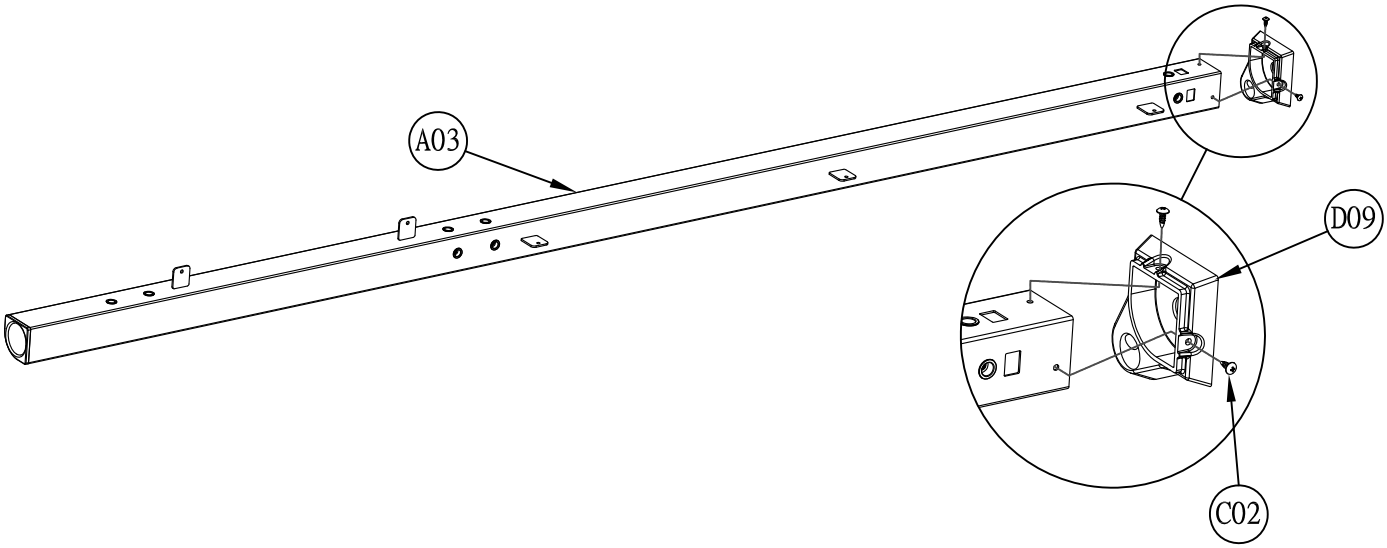

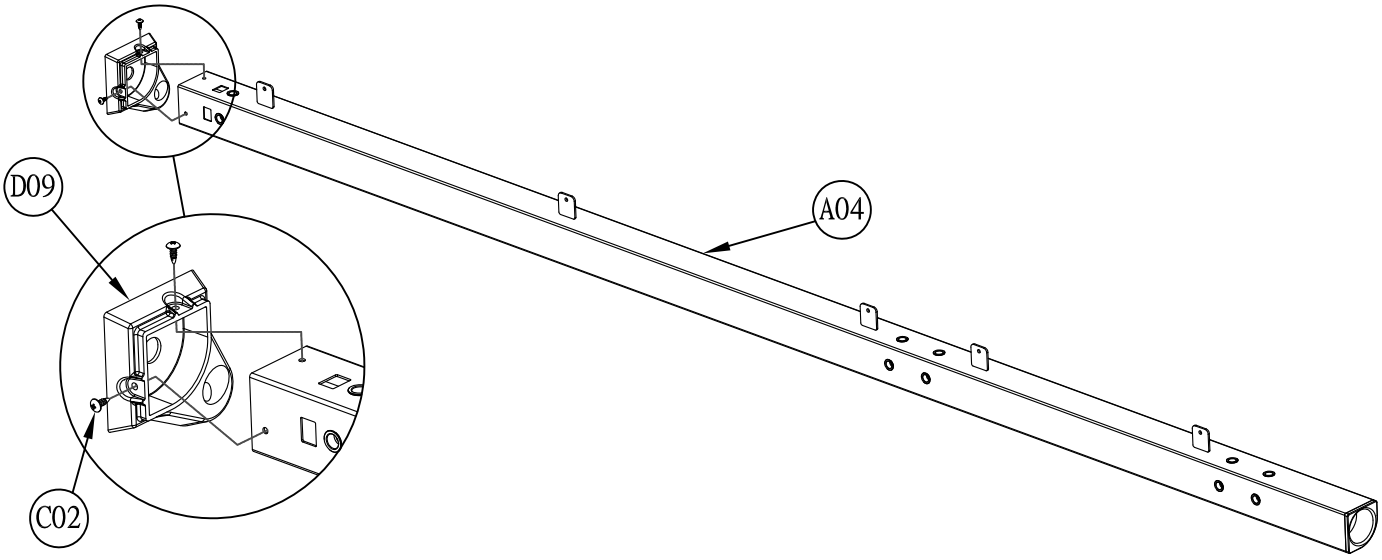

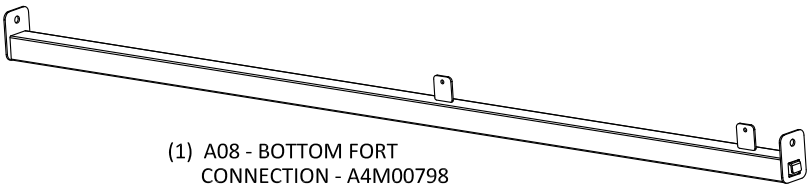

(1) A08 - BOTTOM FORT CONNECTION - A4M00798

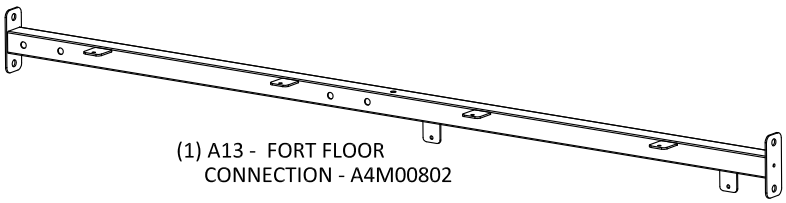

(1) A13 - FORT FLOOR CONNECTION - A4M00802

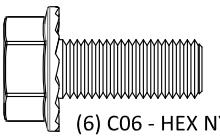

(6) C06 - HEX NY-LOCK SCREW WITH PAD 5/16x20mm - H100596

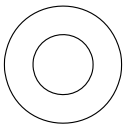

(6) C17 - STEEL WASHER 8.2x16mm - H100608

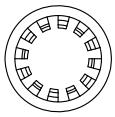

(6) C21 - STAR WASHER 8.4x14.5mm - H100610

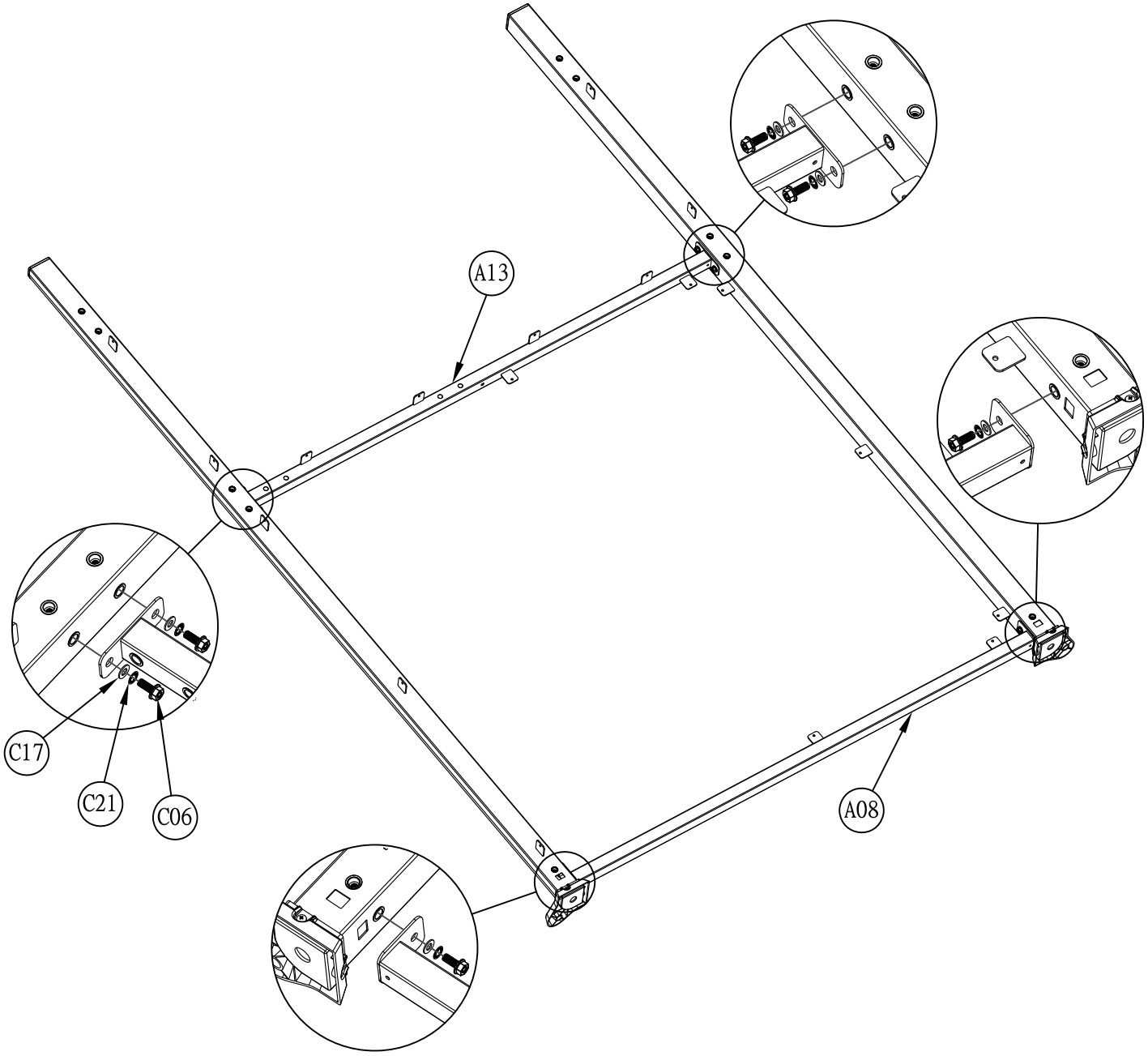

STEP 4

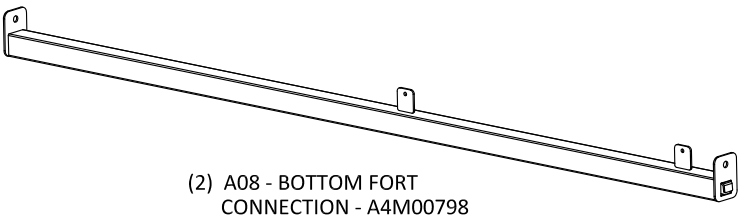

(2) A08 - BOTTOM FORT CONNECTION - A4M00798

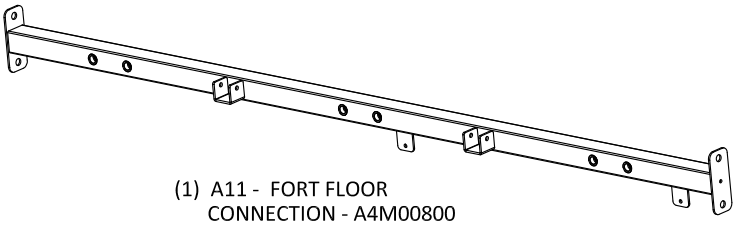

(1) A11 - FORT FLOOR CONNECTION - A4M00800

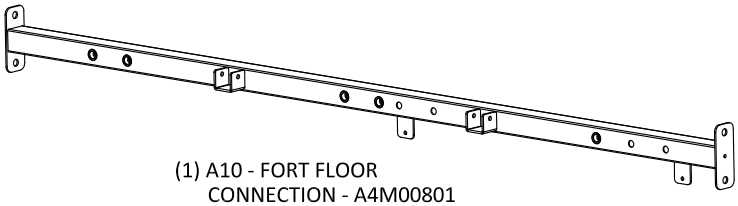

(1) A10 - FORT FLOOR CONNECTION - A4M00801

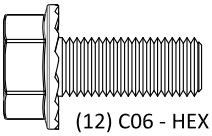

(12) C06 - HEX NY-LOCK SCREW WITH PAD 5/16x20mm - H100596

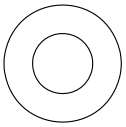

(12) C17 - STEEL WASHER 8.2x16mm - H100608

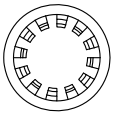

(12) C21 - STAR WASHER 8.4x14.5mm - H100610

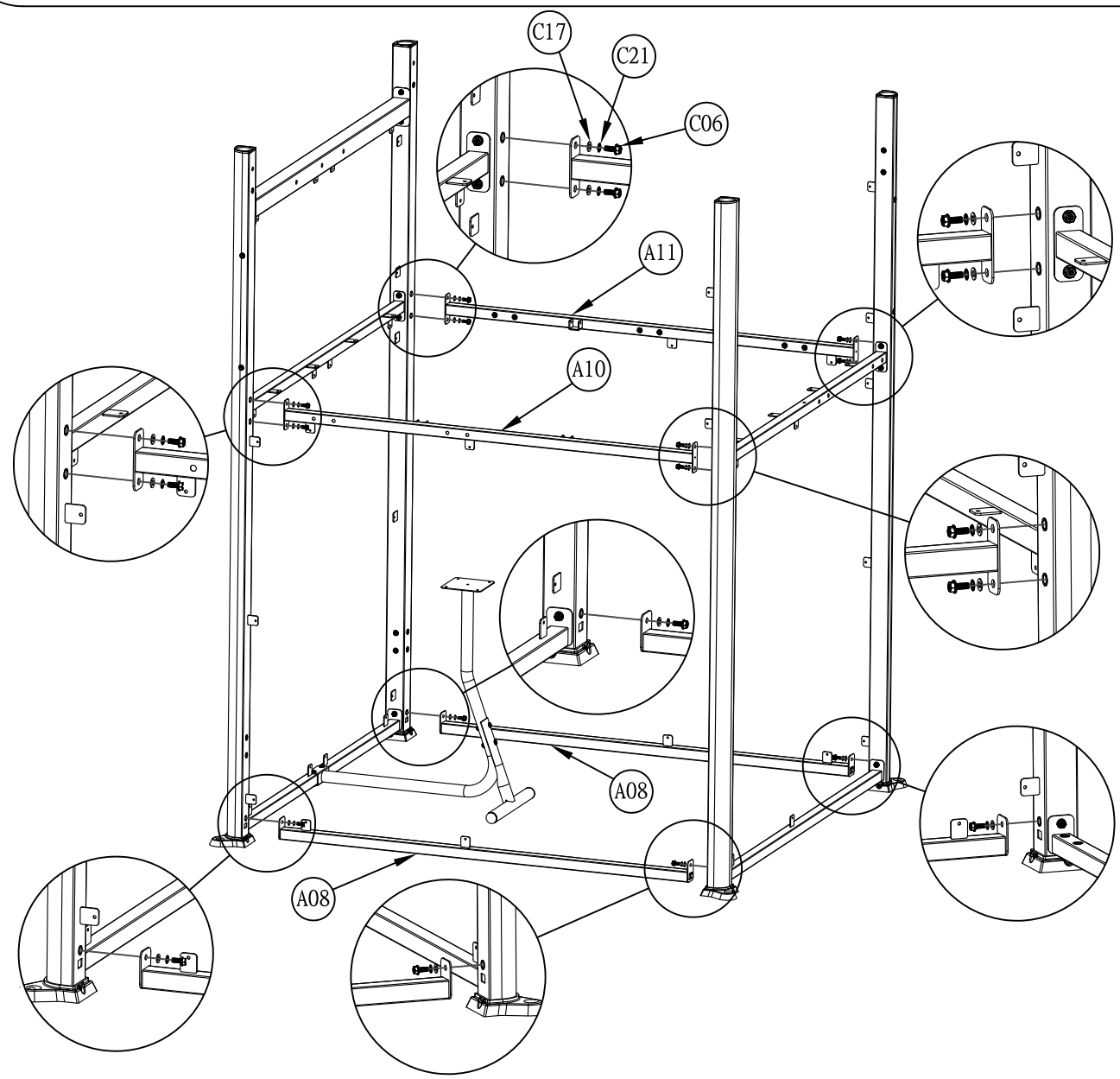

STEP 5

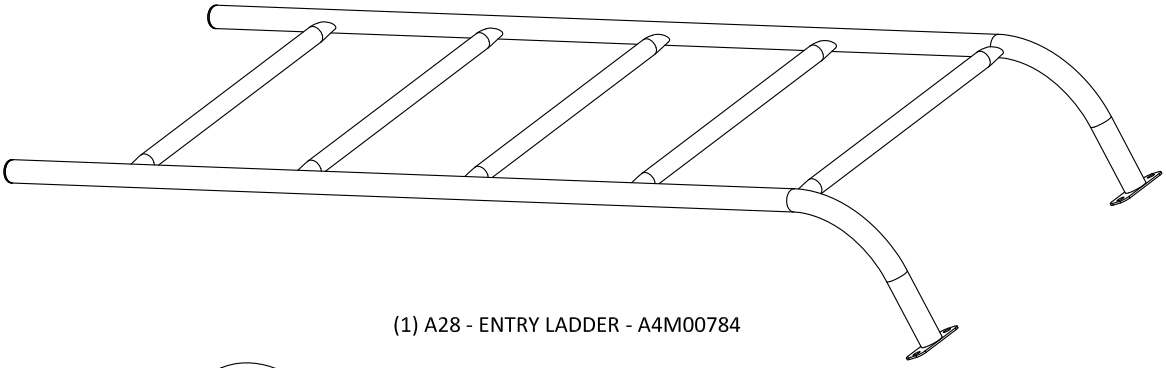

(1) A28 - ENTRY LADDER - A4M00784

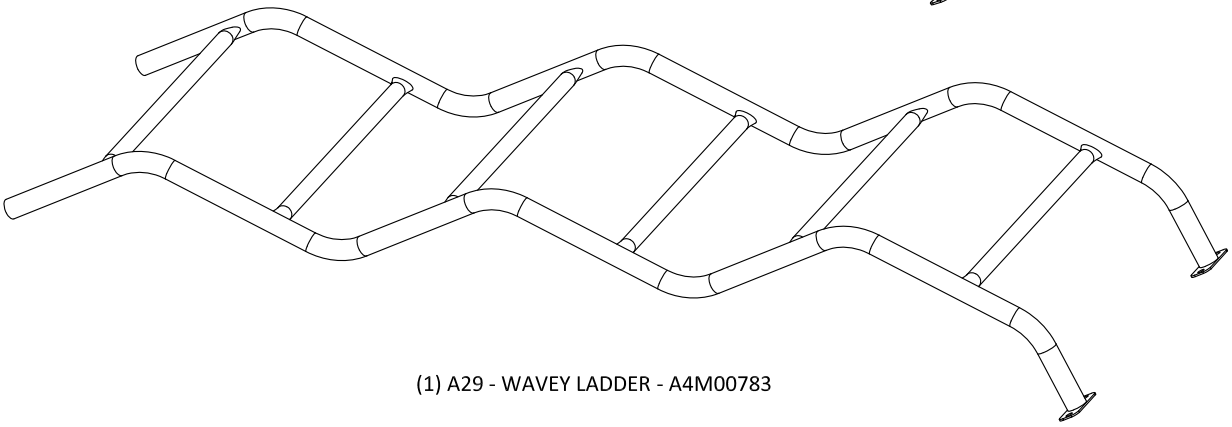

(1) A29 - WAVEY LADDER - A4M00783

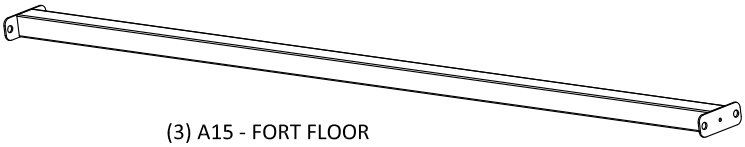

(3) A15 - FORT FLOOR SUPPORT -A4M00804

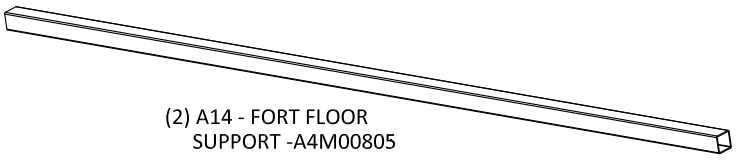

(2) A14 - FORT FLOOR SUPPORT -A4M00805

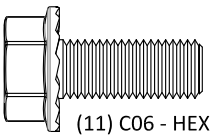

(11) C06 - HEX NY-LOCK SCREW WITH PAD 5/16x20mm - H100596

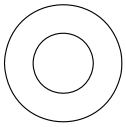

(19) C17 - STEEL WASHER 8.2x16mm - H100608

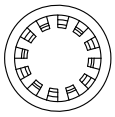

(19) C21 - STAR WASHER 8.4x14.5mm - H100610

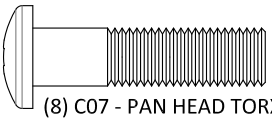

(8) C07 - PAN HEAD TORX SEMI-THREAD SCREW 5/16x31.7mm - H100605

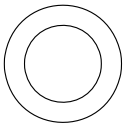

(8) C18 - STEEL WASHER 10.5x16mm - H100607

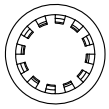

(8) C22 - STAR WASHER 3/8 - H100611

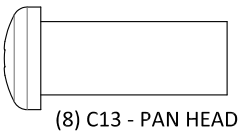

(8) C13 - PAN HEAD TORX NUT 5/16x25.4mm - H100606

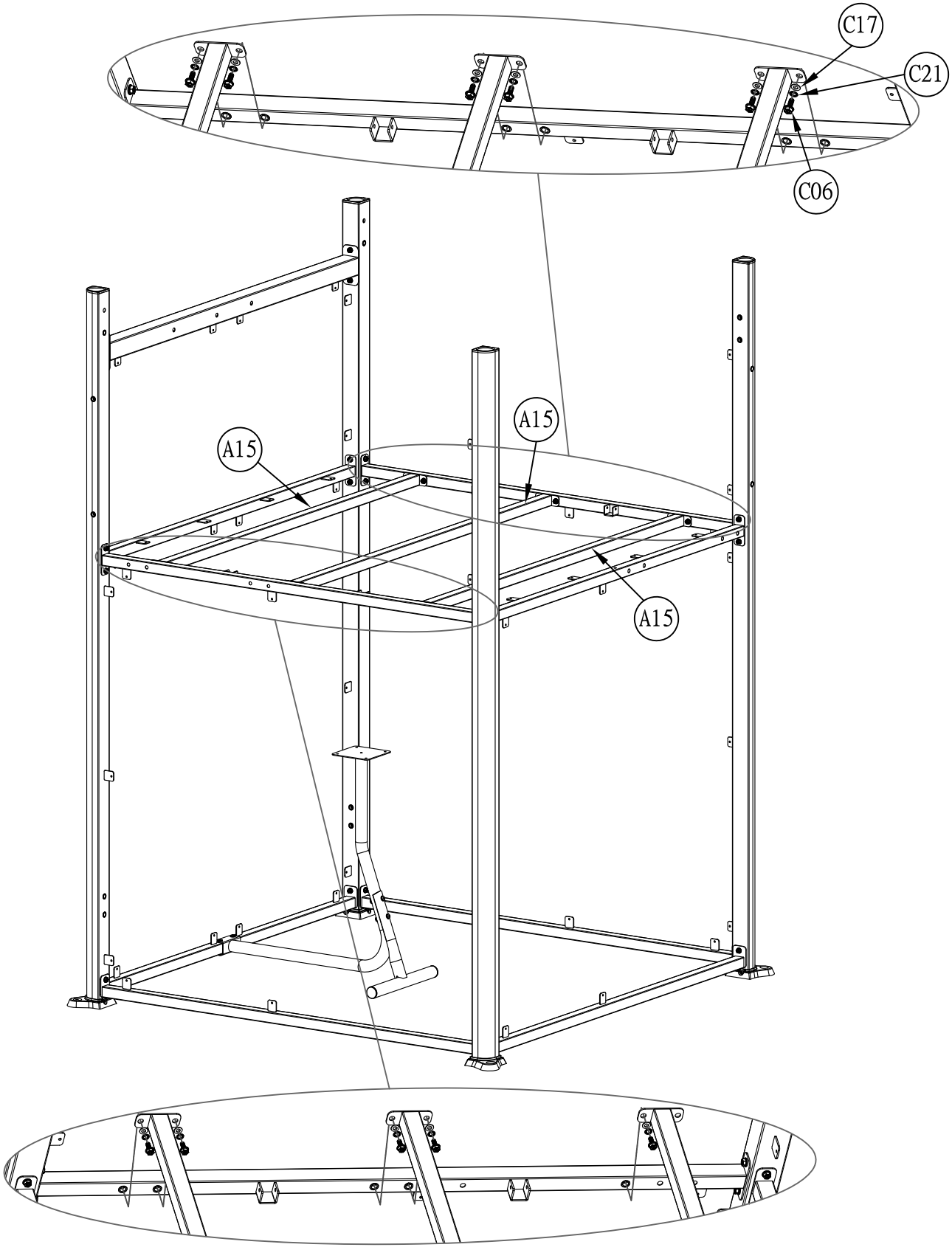
C17
C21
C06
A15
A15
A15

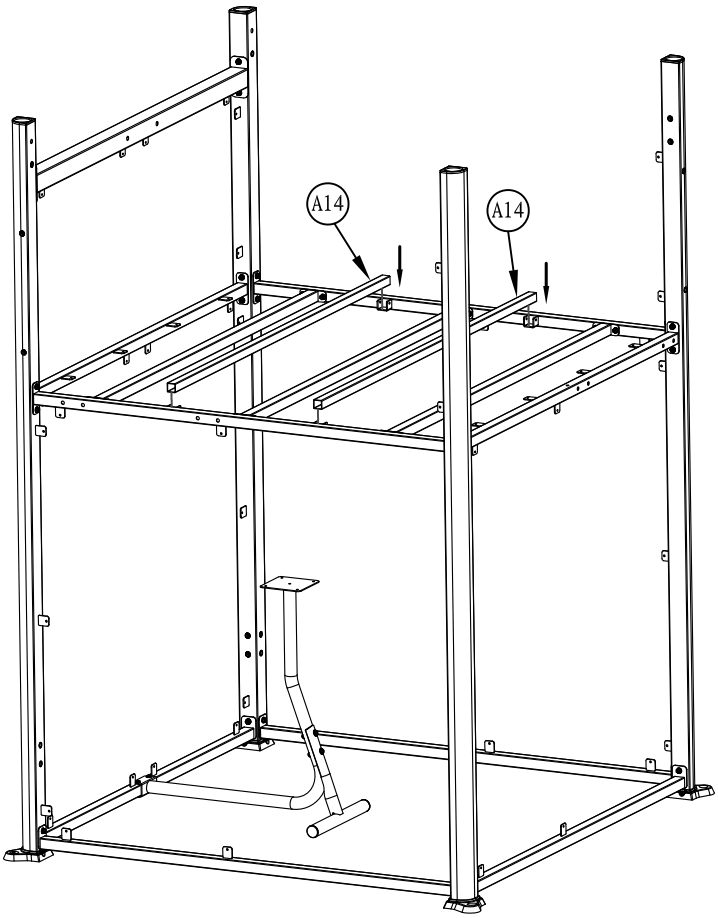
A14
A14

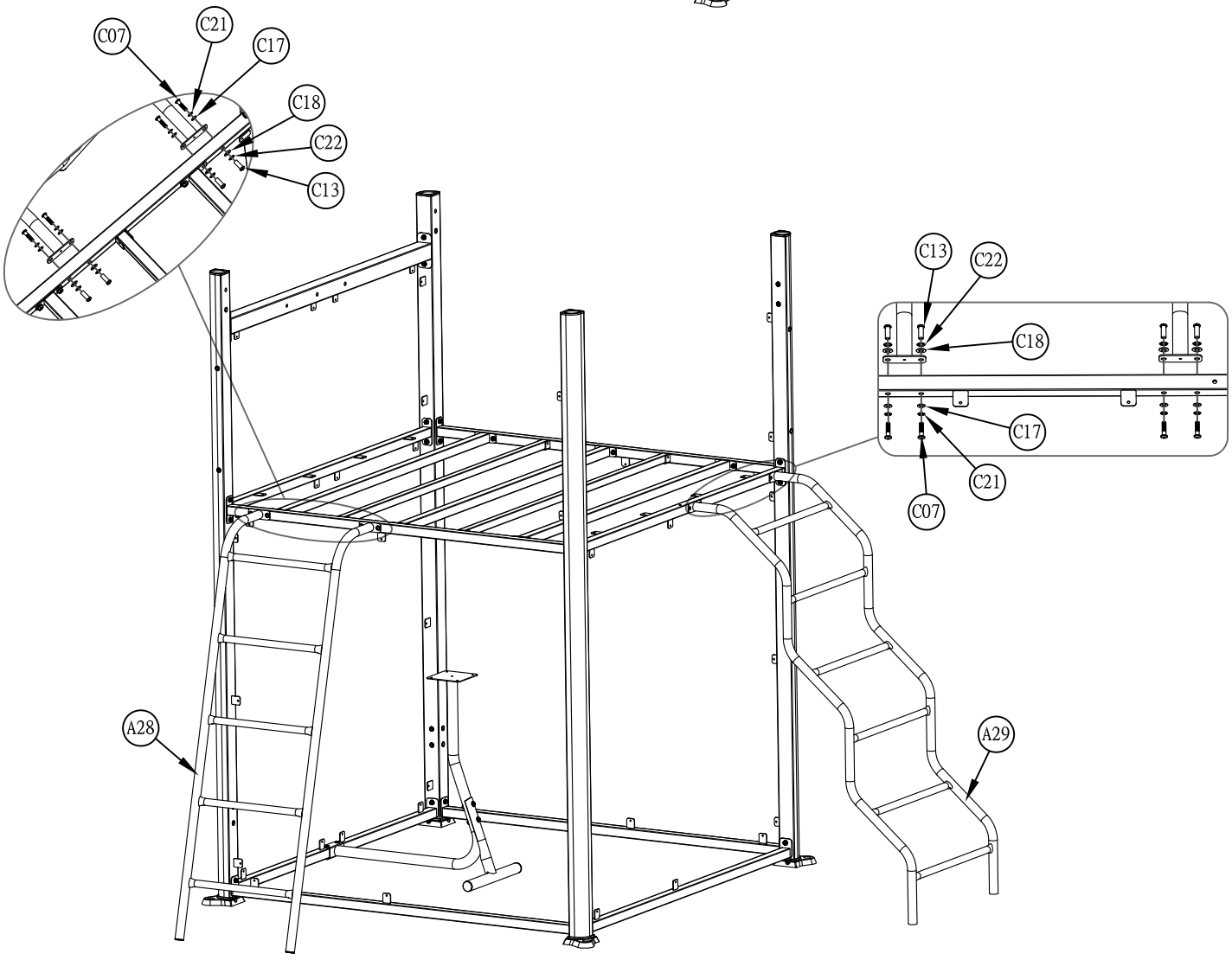
C07
C21
C17
C18
C22
C13
C13
C22
C18
C17
C21
C07
A28
A29

STEP 6

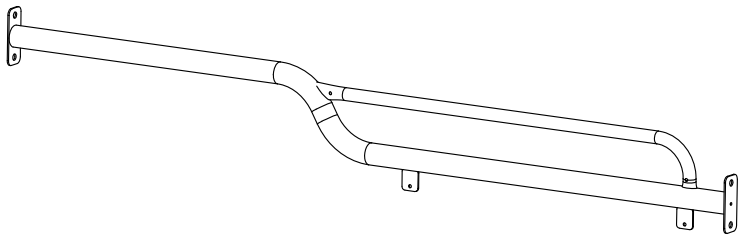

(2) A17 - S-SHAPED HANDRAIL SUPPORT - A4M00806

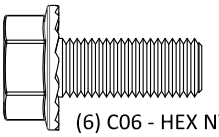

(6) C06 - HEX NY-LOCK SCREW WITH PAD 5/16x20mm - H100596

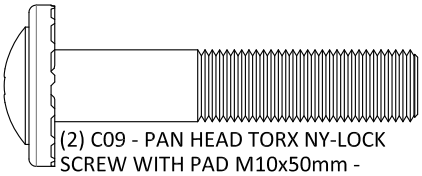

(2) C09 - PAN HEAD TORX NY-LOCK SCREW WITH PAD M10x50mm - H100603

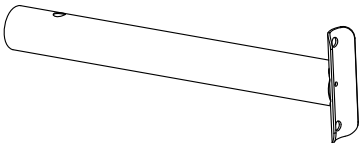

(2) A19 - VERTICAL ROOF SUPPORT - A4M00777

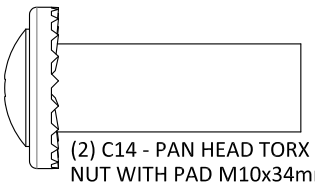

(2) C14 - PAN HEAD TORX NY-LOCK NUT WITH PAD M10x34mm - H100604

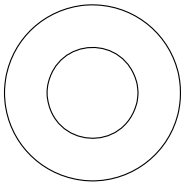

(4) C19 - STEEL WASHER 12.4x24mm - H100609

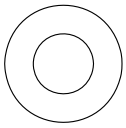

(6) C17 - STEEL WASHER 8.2x16mm - H100608

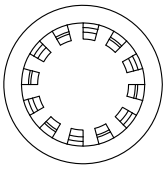

(4) C23 - STAR WASHER 12.4x21.6mm - H100612

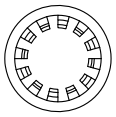

(6) C21 - STAR WASHER 8.4x14.5mm - H100610

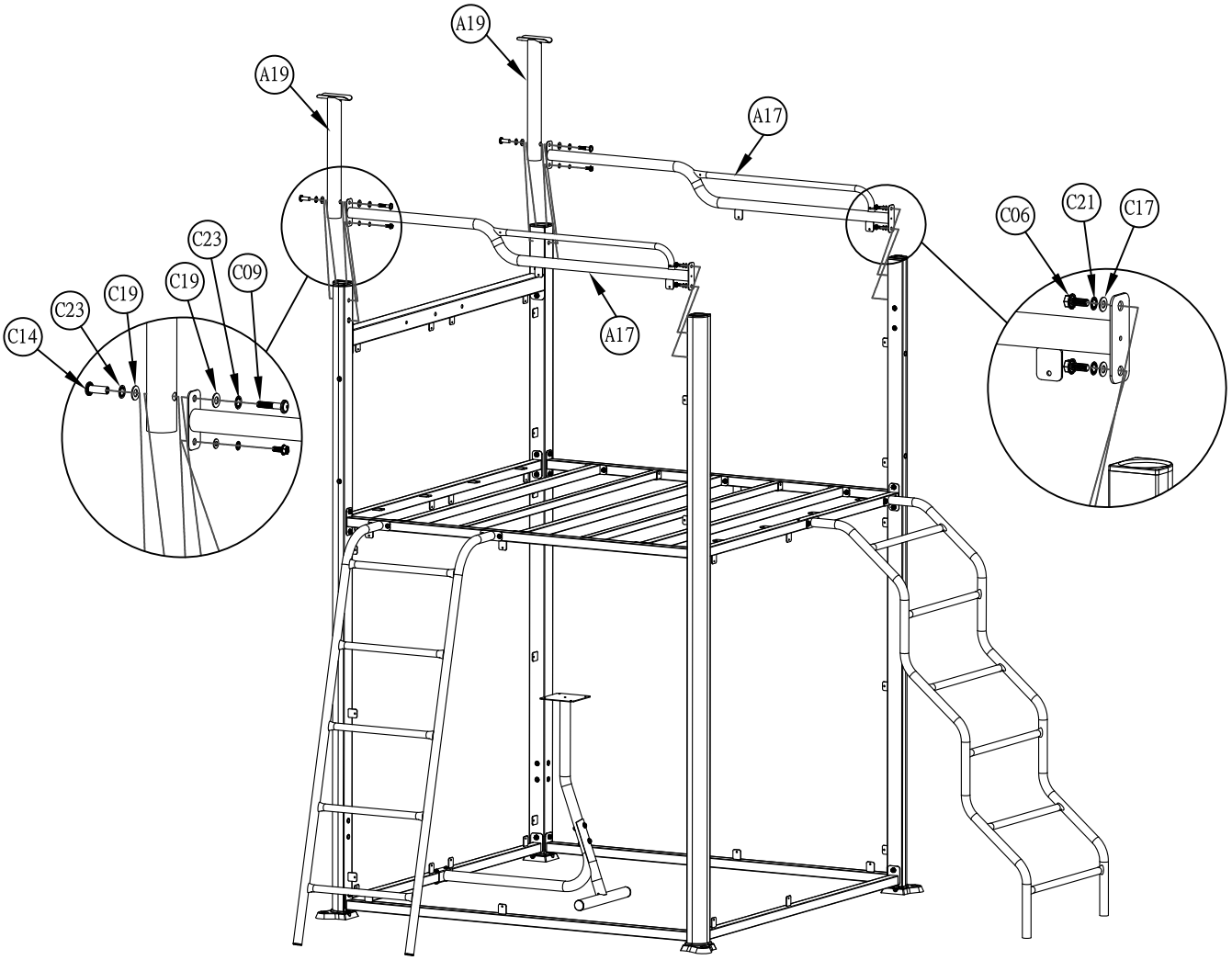

STEP 7

(1) B06 - FORT FLOOR MIDDLE - A6P00225

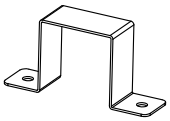

(12) A34 - FLOOR SUPPORT BRACKET - A4M00817

(2) B07 - FORT FLOOR SIDE - A6P00226

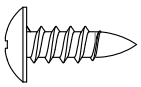

(32) C01 - PAN HEAD PHILLIPS SELF-TAPPING SCREW 5x15mm - H100592

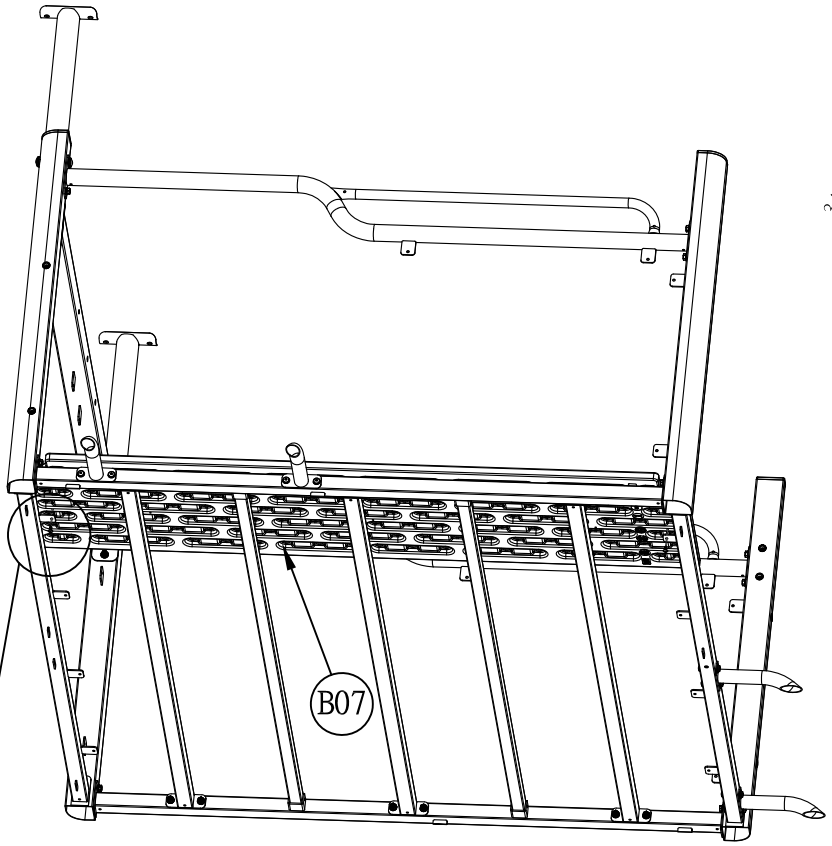

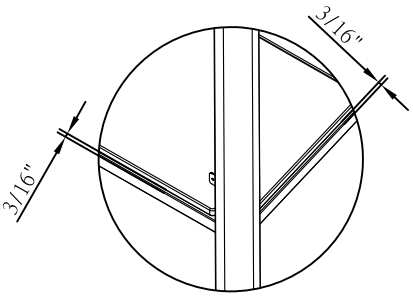

Leave 3/16" between the floor panel and the edge of the support tube

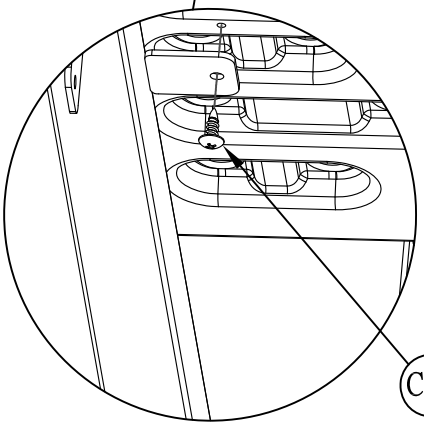

Attach as shown

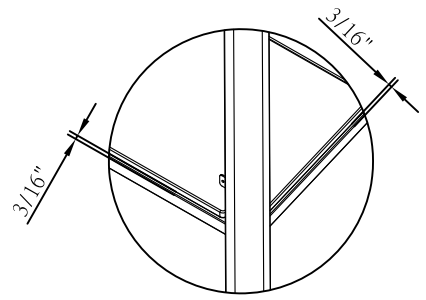

Leave 3/16" between the floor panel and the edge of the support tube

Attach as shown

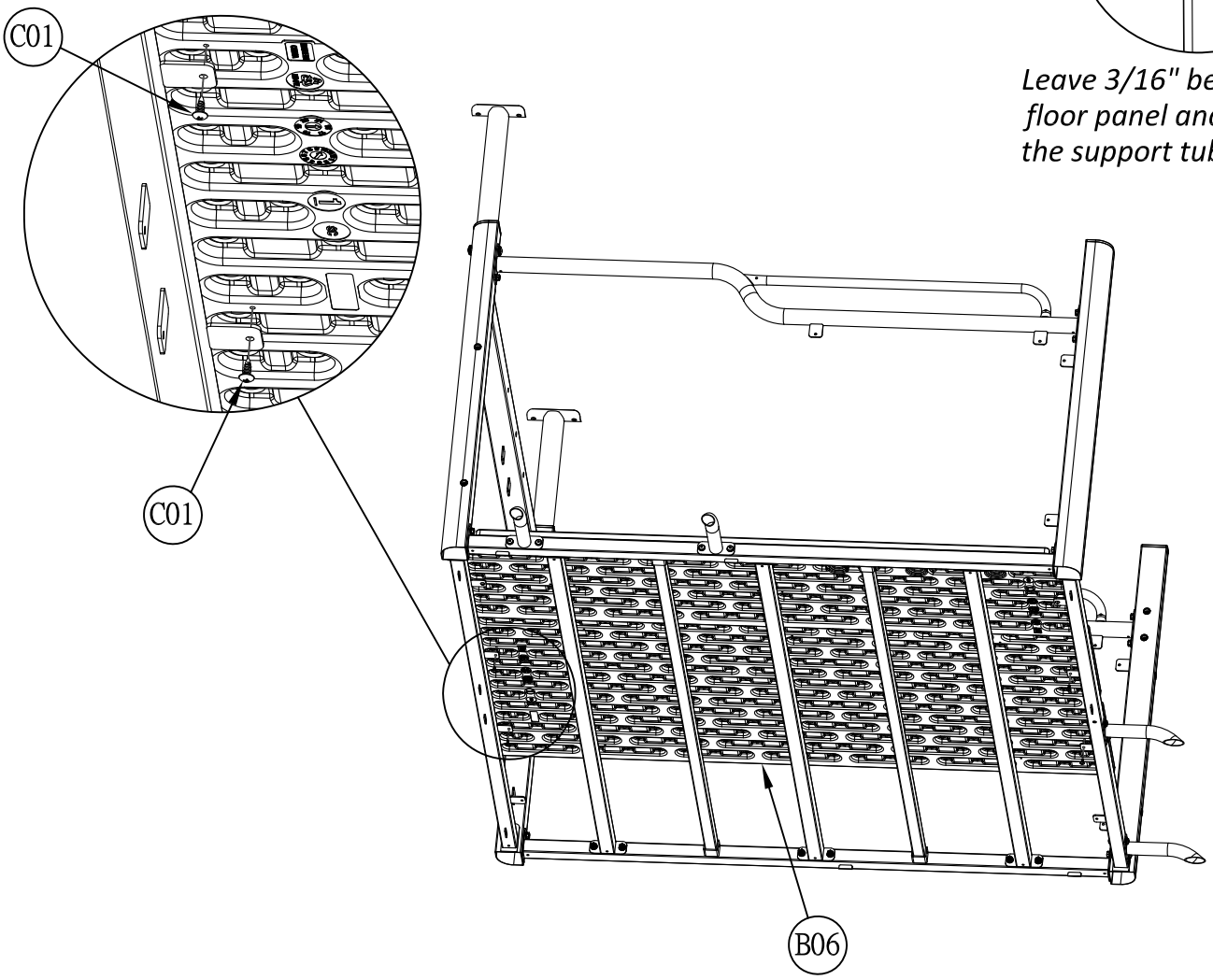

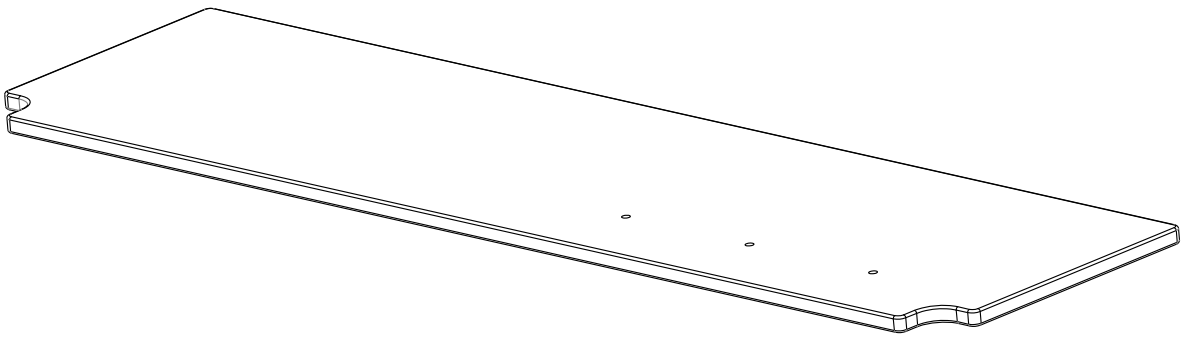

Drill the thru hole to 3/8"

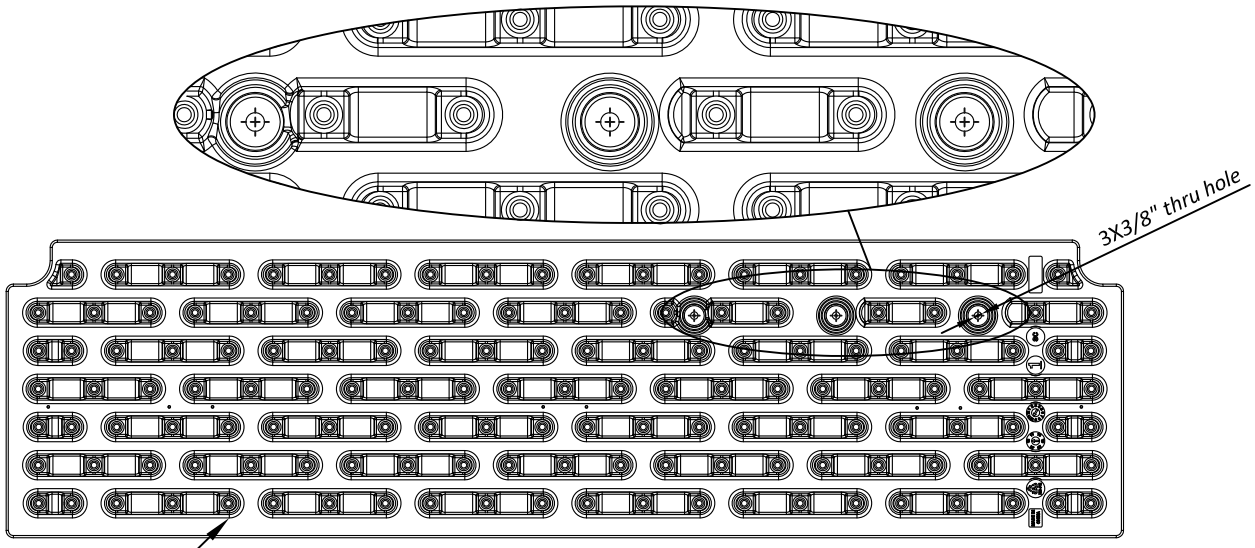

Drill the hole through the guide hole

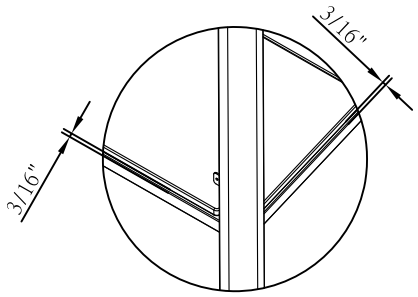

Leave 3/16" between the floor panel and the edge of the support tube

Attach as shown

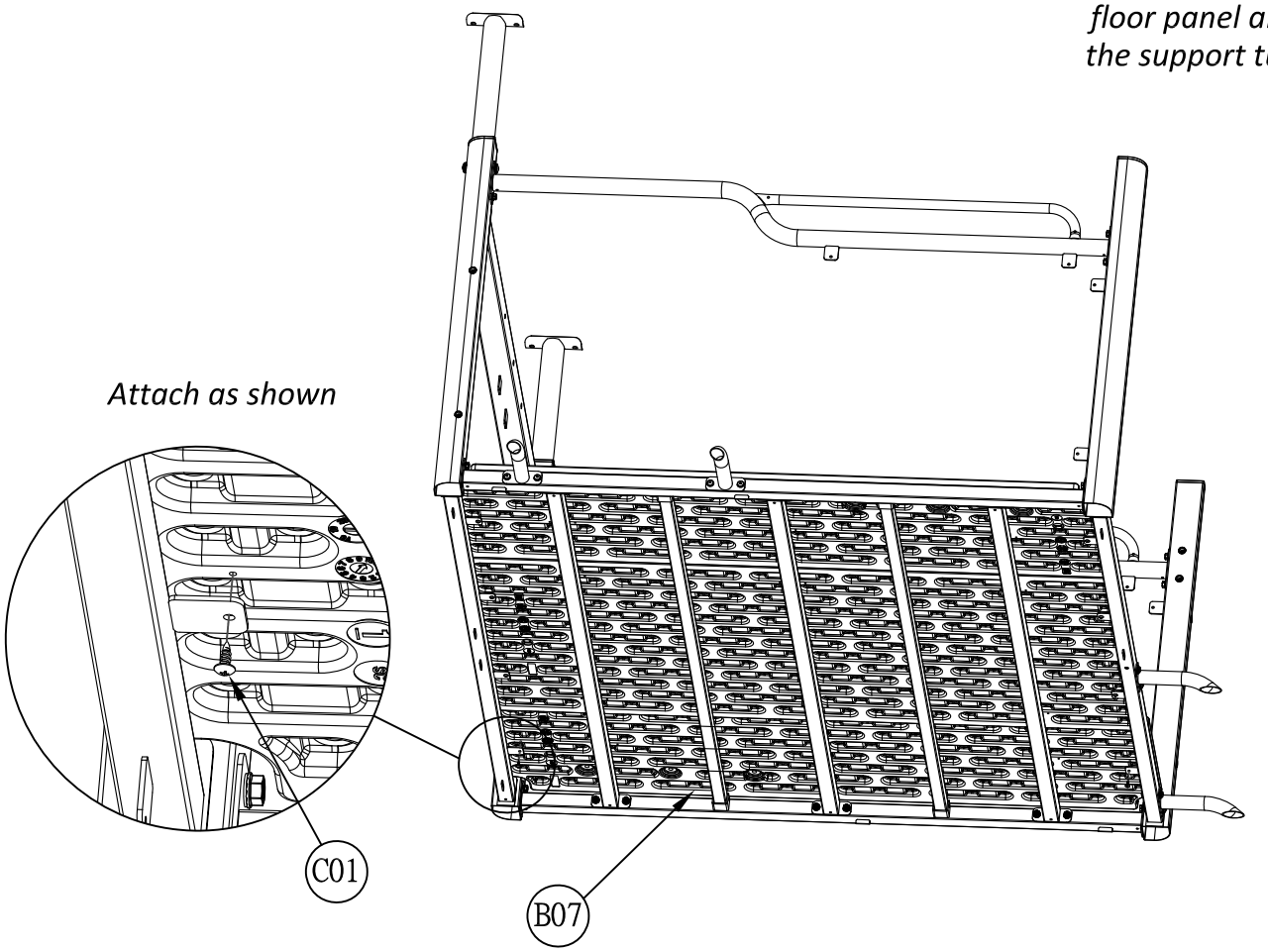

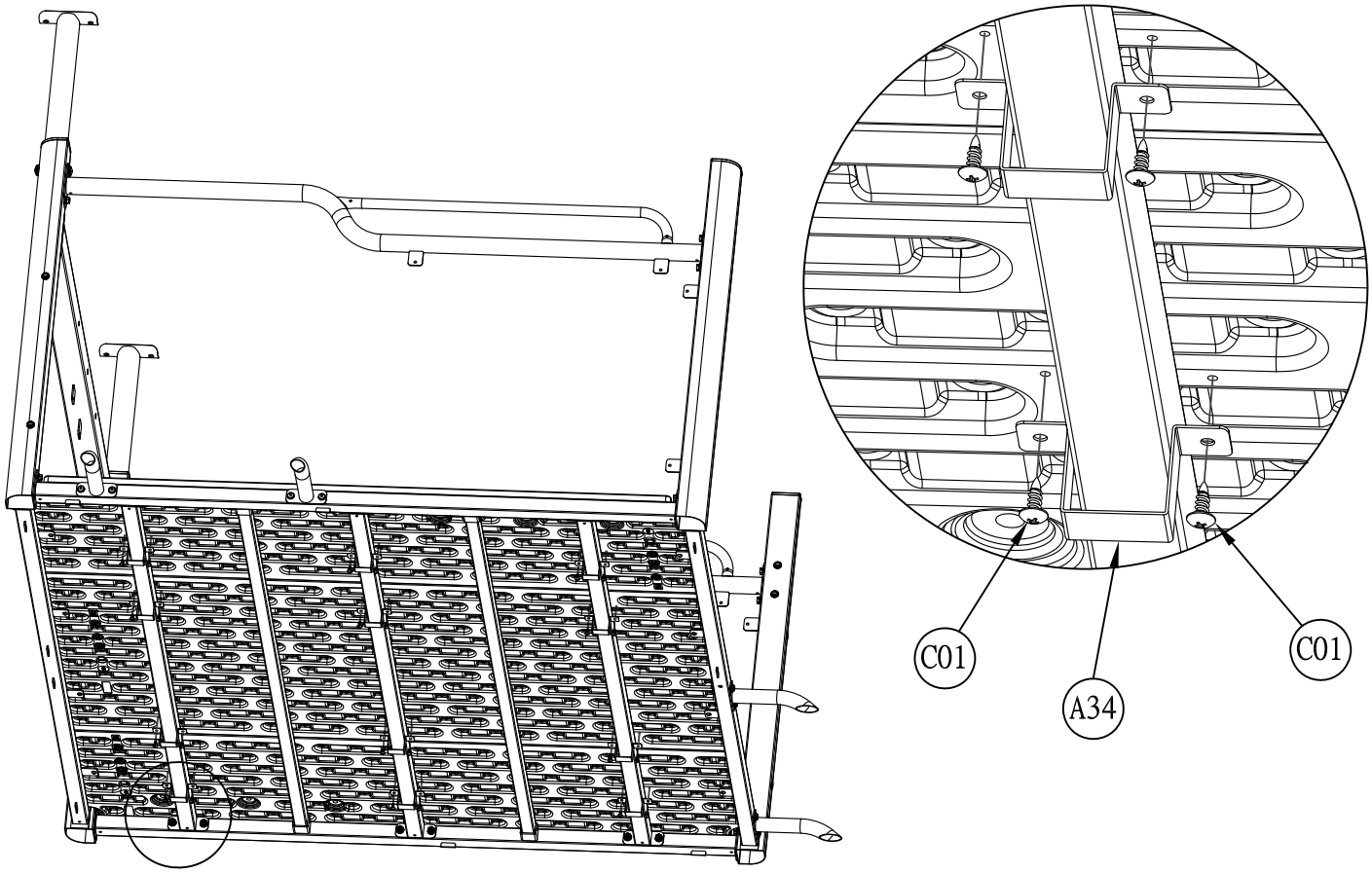
C01
A34
C01

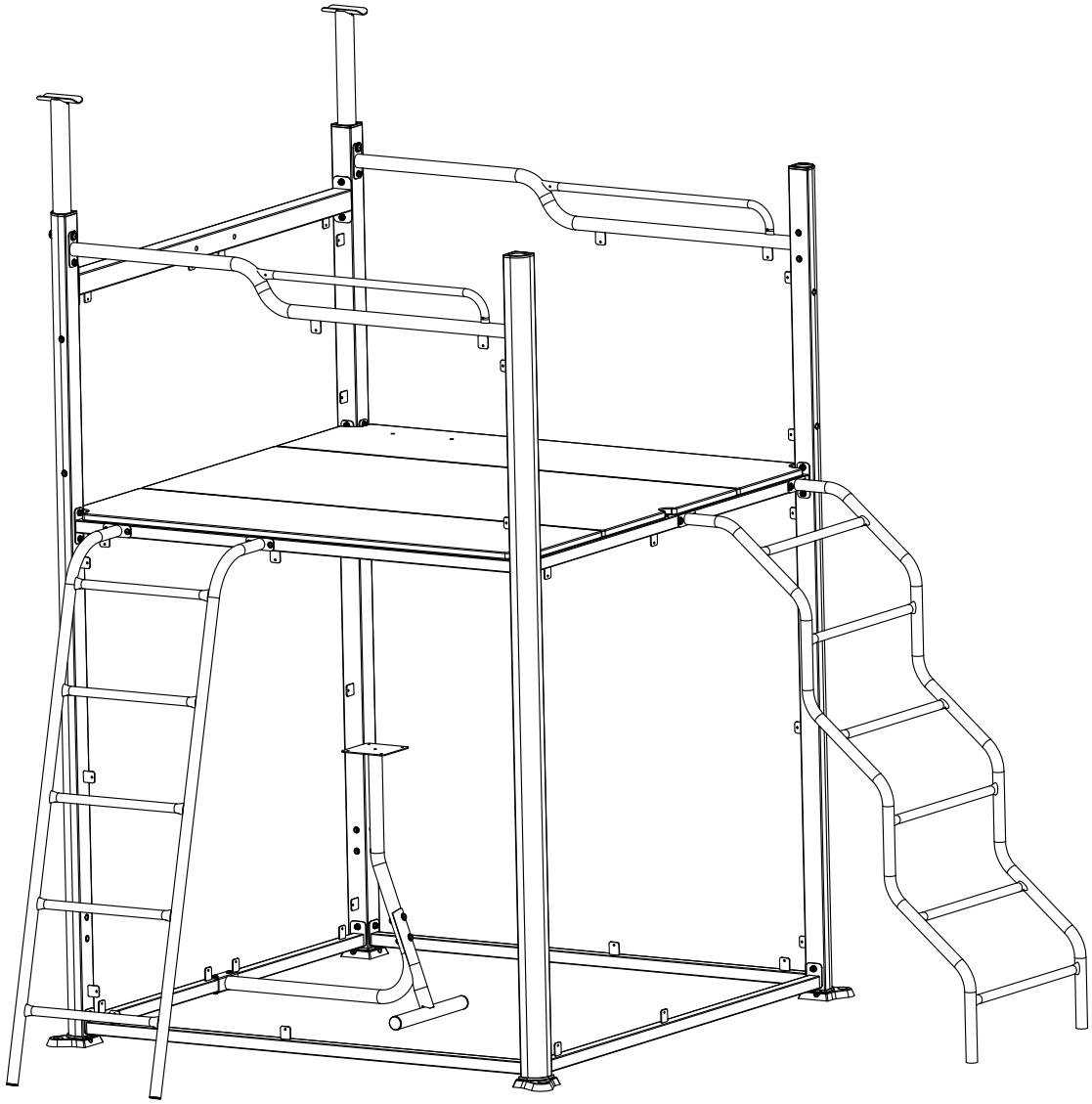

STEP 8

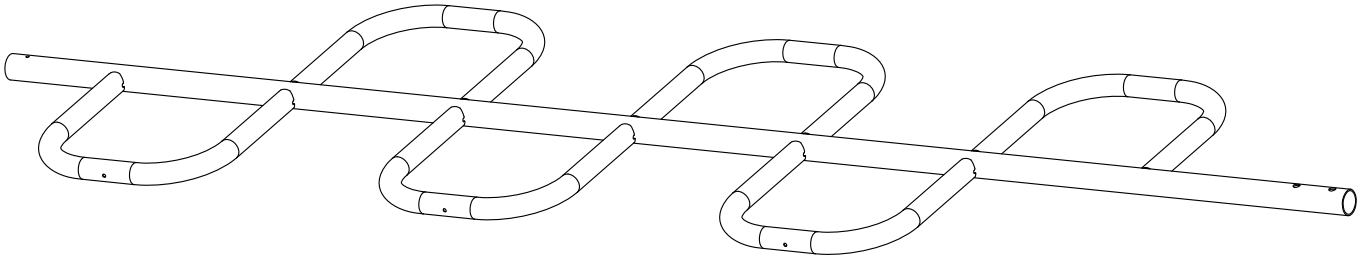

(1) A24 - LADDER TREE - A4M00814

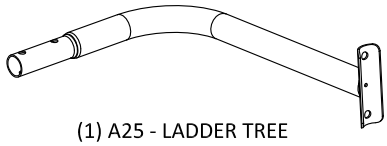

(1) A25 - LADDER TREE L-TUBE - A4M00813

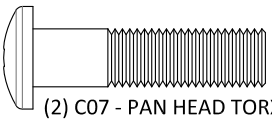

(2) C07 - PAN HEAD TORX SEMI-THREAD SCREW 5/16x31.7mm - H100605

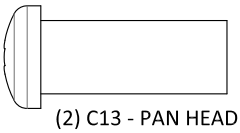

(2) C13 - PAN HEAD TORX NUT 5/16x25.4mm - H100606

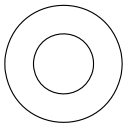

(2) C17 - STEEL WASHER 8.2x16mm - H100608

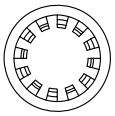

(2) C21 - STAR WASHER 8.4x14.5mm - H100610

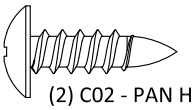

(2) C02 - PAN HEAD PHILLIPS SELF-TAPPING SCREW 6X20mm - H100618

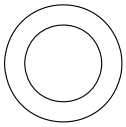

(2) C18 - STEEL WASHER 10.5x16mm - H100607

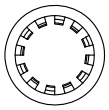

(2) C22 - STAR WASHER 3/8 - H100611

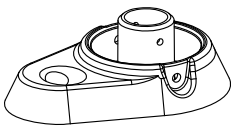

(1) D08 - ROUND TUBE FOOT - A6P00190

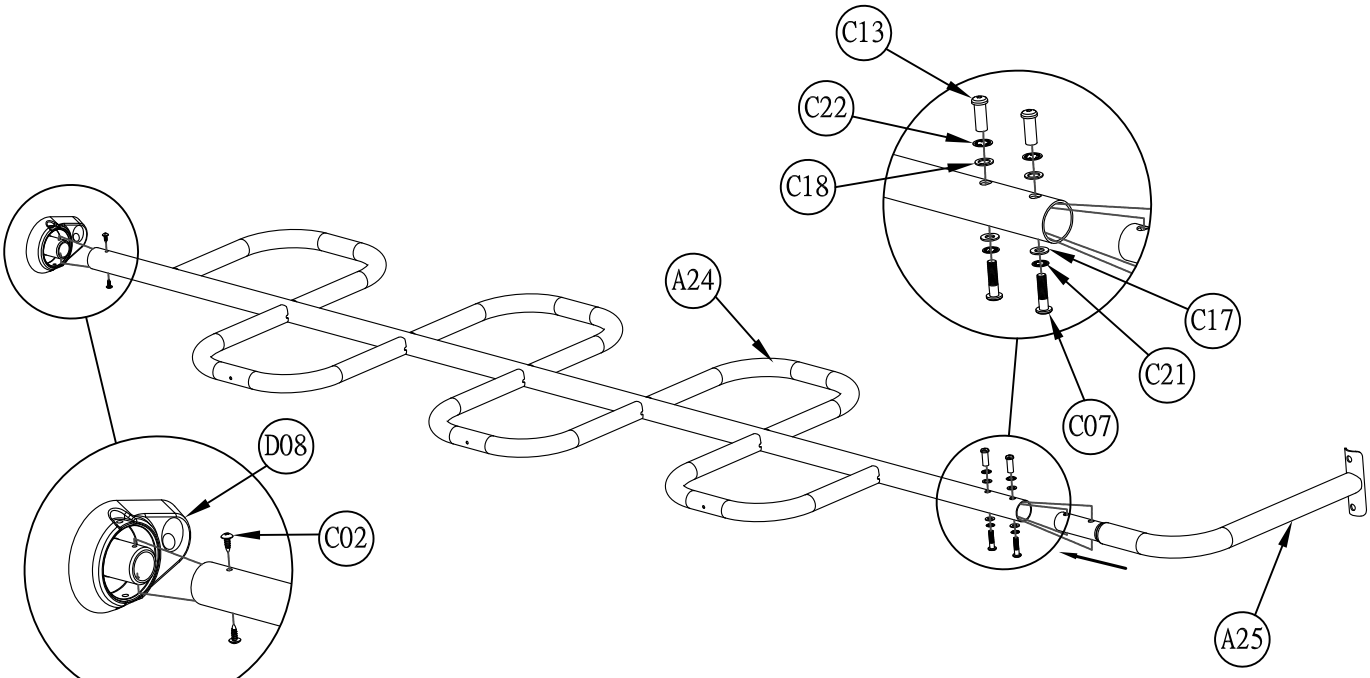

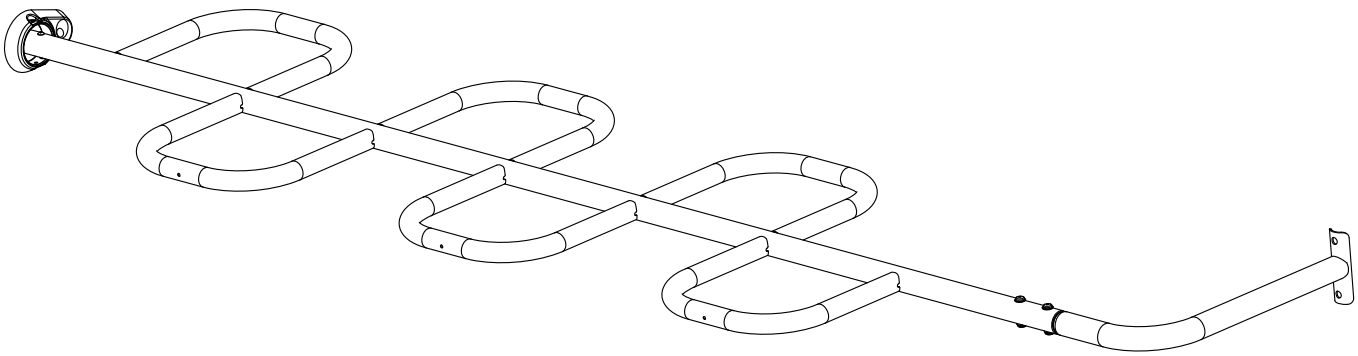

STEP 9

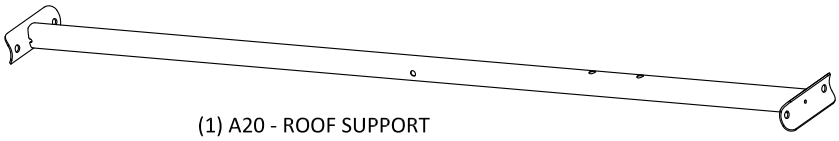

(1) A20 - ROOF SUPPORT CONNECTOR - A4M00820

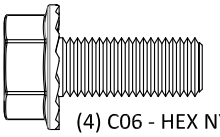

(4) C06 - HEX NY-LOCK SCREW WITH PAD 5/16x20mm - H100596

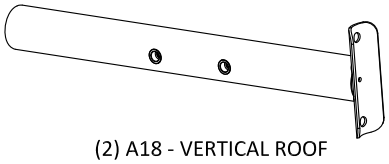

(2) A18 - VERTICAL ROOF SUPPORT - A4M00778

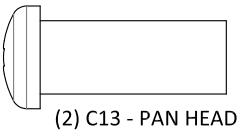

(2) C13 - PAN HEAD TORX NUT 5/16x25.4mm - H100606

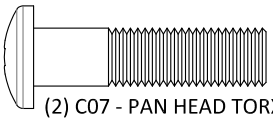

(2) C07 - PAN HEAD TORX SEMI-THREAD SCREW 5/16x31.7mm - H100605

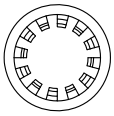

(6) C21 - STAR WASHER 8.4x14.5mm - H100610

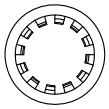

(2) C22 - STAR WASHER 3/8 - H100611

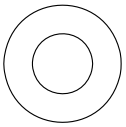

(6) C17 - STEEL WASHER 8.2x16mm - H100608

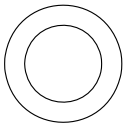

(2) C18 - STEEL WASHER 10.5x16mm - H100607

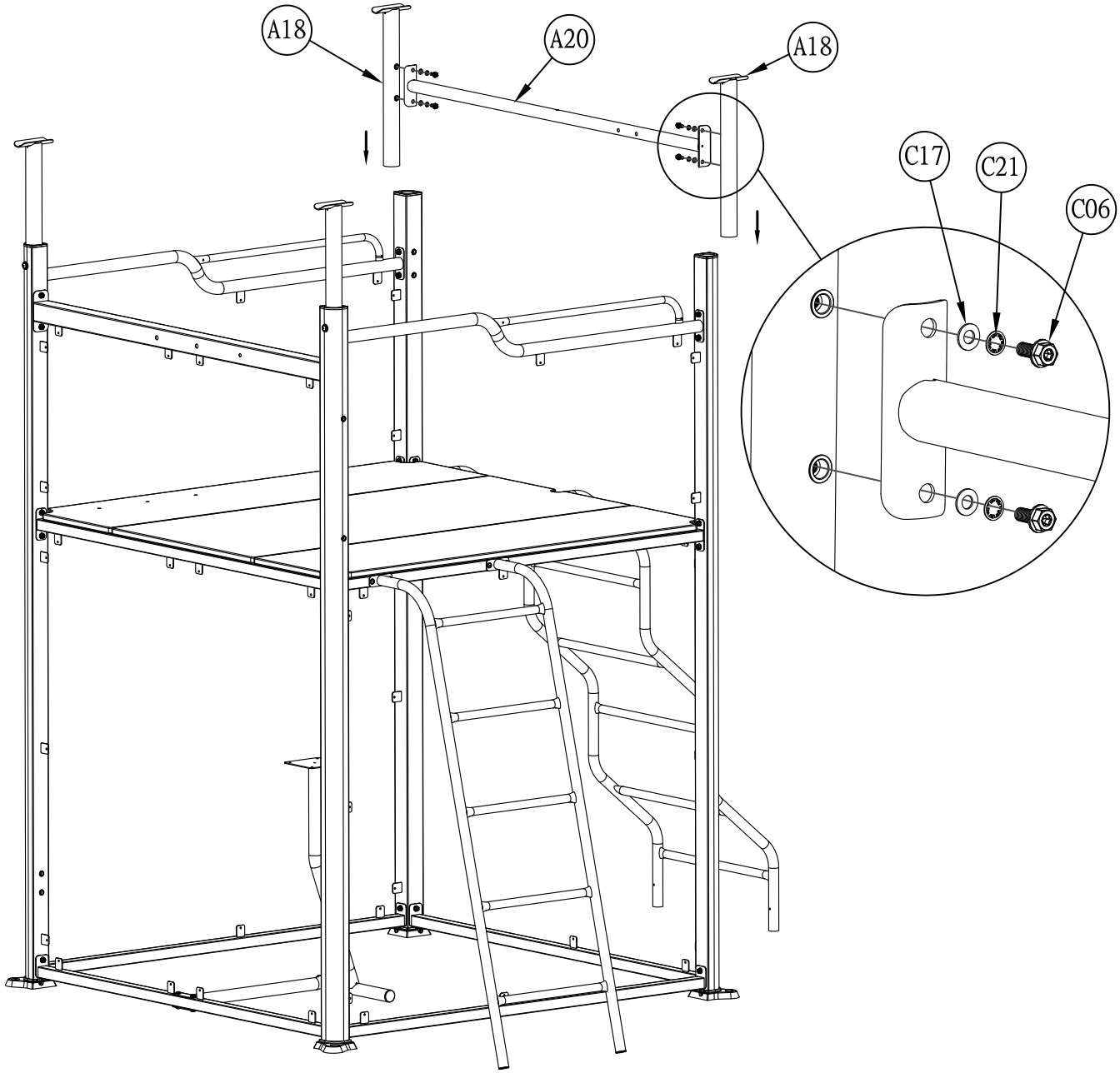

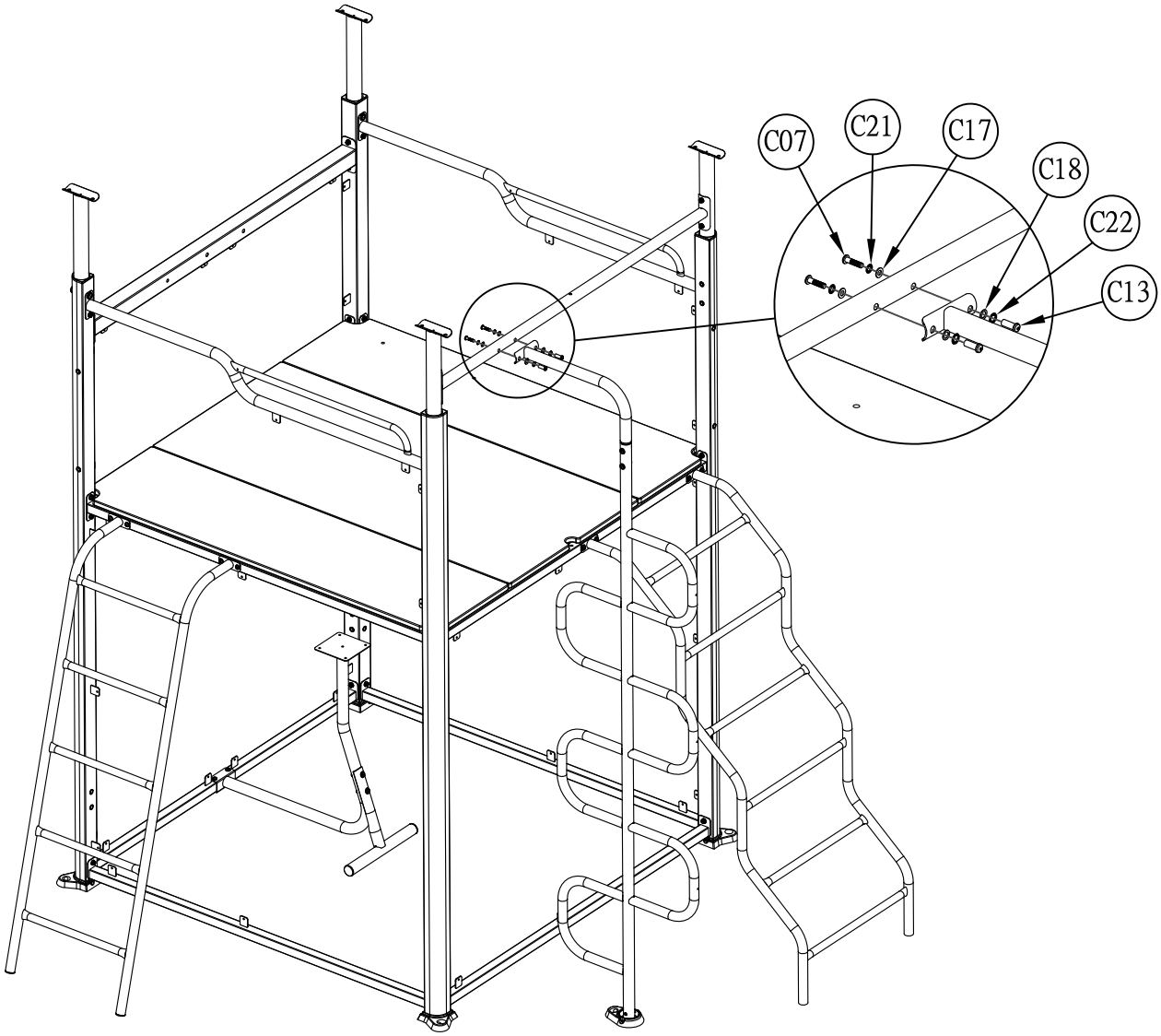

STEP 10

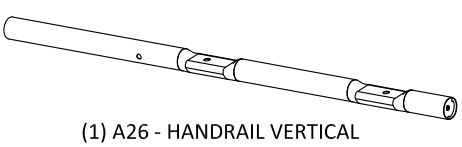

(1) A26 - HANDRAIL VERTICAL TUBE - A4M00808

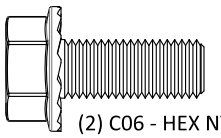

(2) C06 - HEX NY-LOCK SCREW WITH PAD 5/16x20mm - H100596

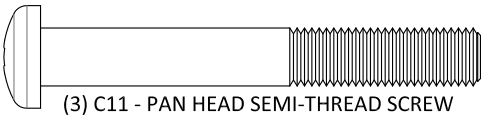

(3) C11 - PAN HEAD SEMI-THREAD SCREW 5/16x60mm - H100601

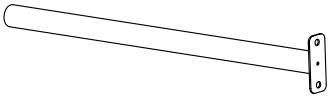

(1) A27 - HANDRAIL CROSS TUBE - A4M00809

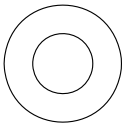

(5) C17 - STEEL WASHER 8.2x16mm - H100608

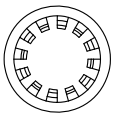

(5) C21 - STAR WASHER 8.4x14.5mm - H100610

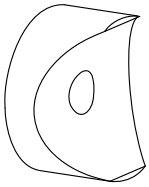

(2) D11 - PLASTIC TUBE SQUARE - A6P00192

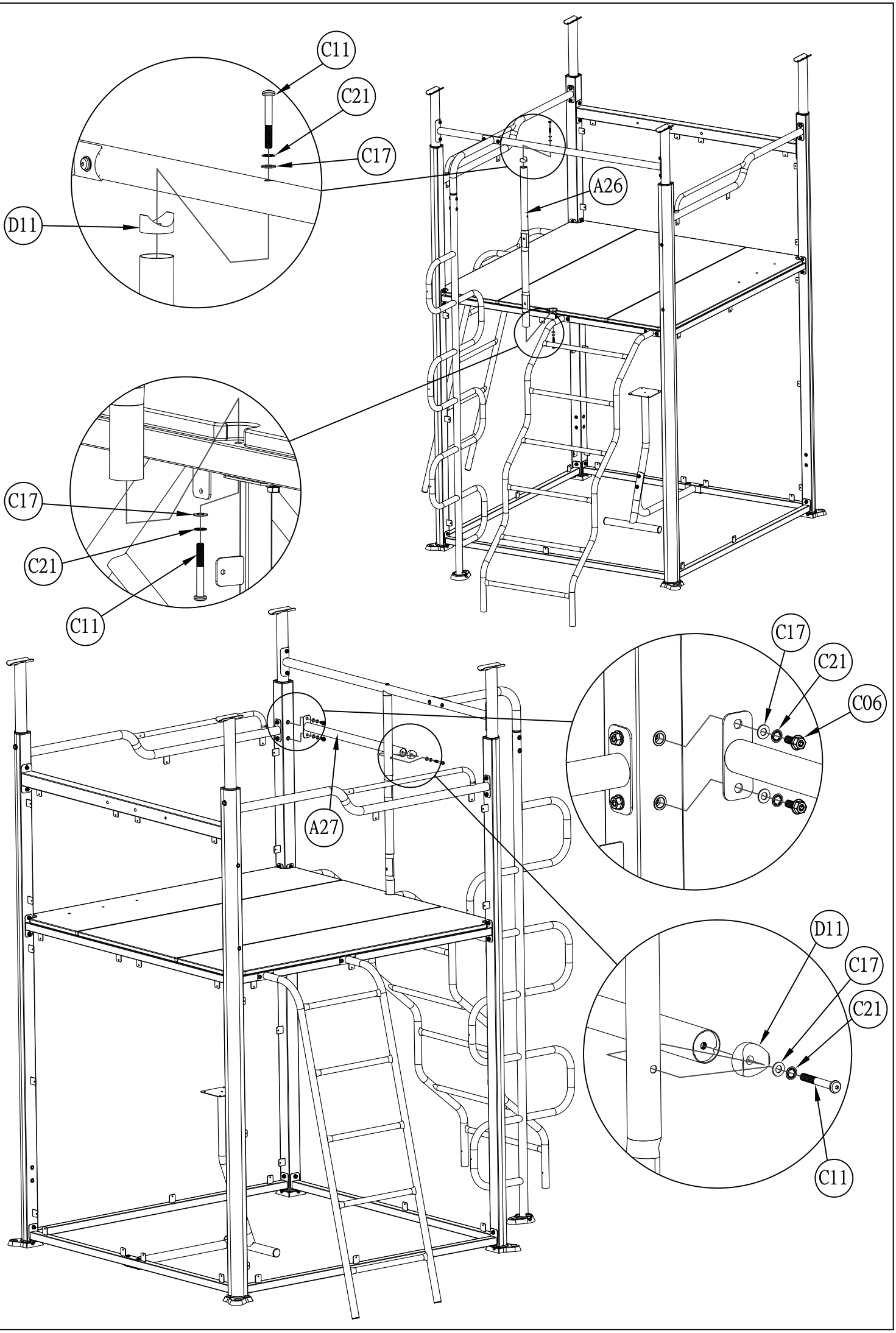
C11
C21
C17
D11
A26
C17
C21
C11
C17
C21
C06
A27
D11
C17
C21
C11

STEP 11

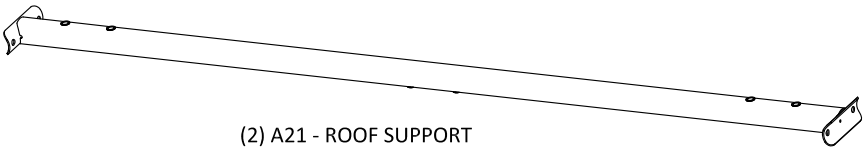

(2) A21 - ROOF SUPPORT CONNECTOR - A4M00779

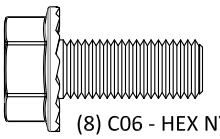

(8) C06 - HEX NY-LOCK SCREW WITH PAD 5/16x20mm - H100596

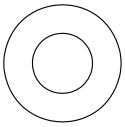

(8) C17 - STEEL WASHER 8.2x16mm - H100608

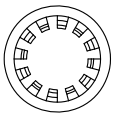

(8) C21 - STAR WASHER 8.4x14.5mm - H100610

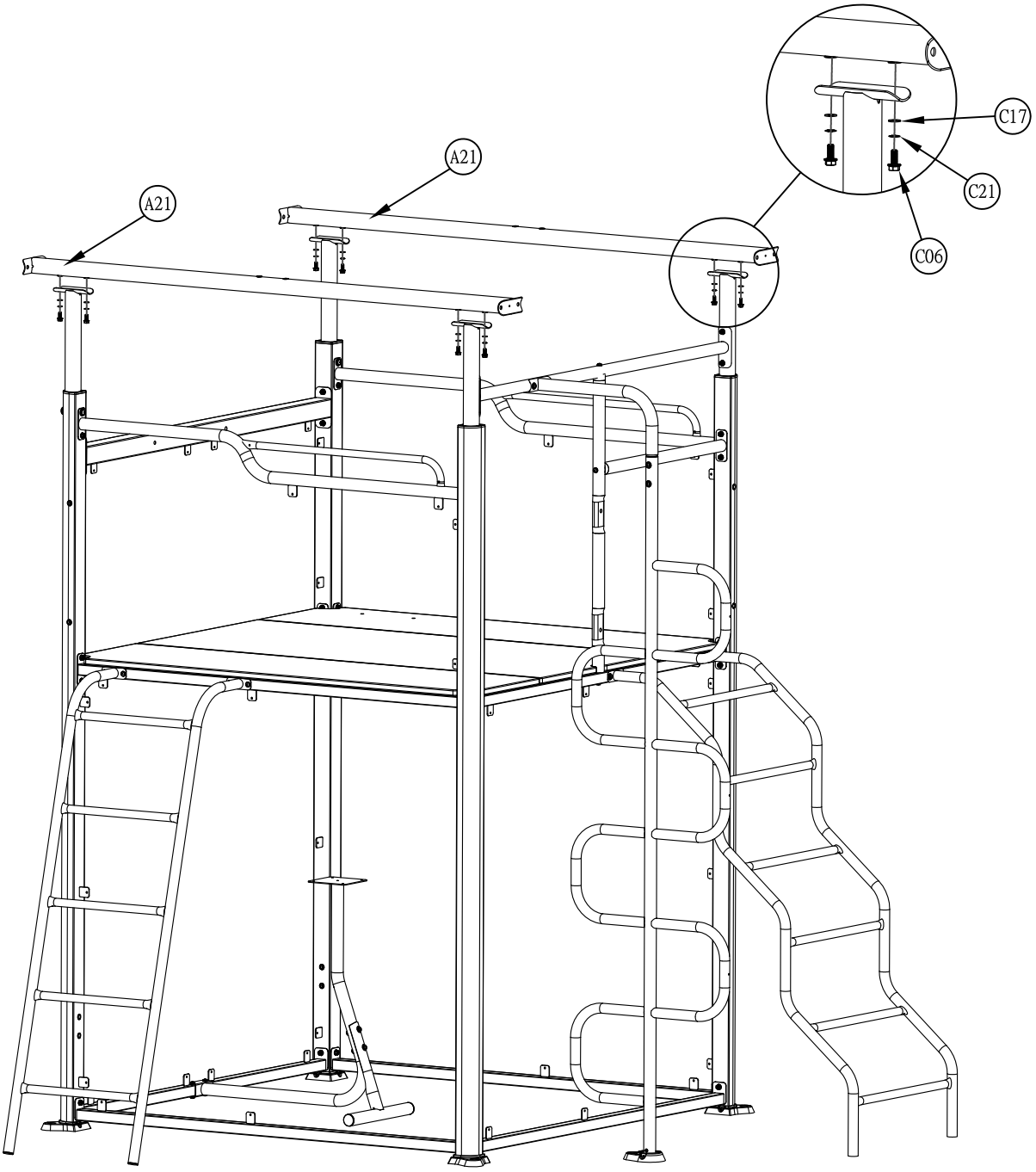

STEP 12

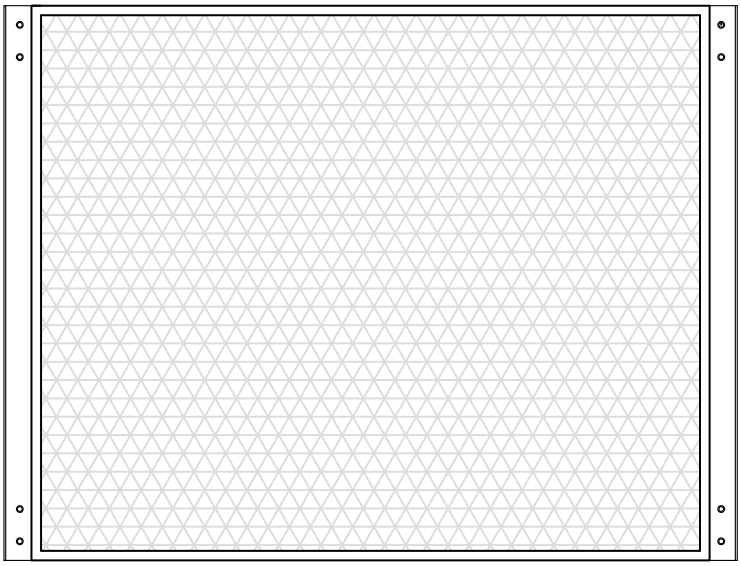

(1) D01 - TARP - A6P00203

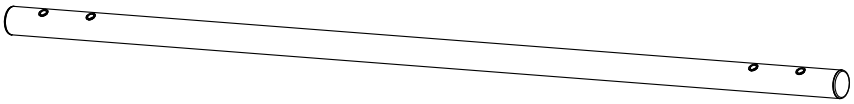

(2) A23 - SIDE TARP SUPPORT - A4M00781

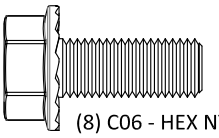

(8) C06 - HEX NY-LOCK SCREW WITH PAD 5/16x20mm - H100596

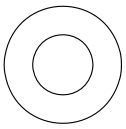

(8) C17 - STEEL WASHER 8.2x16mm - H100608

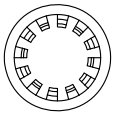

(8) C21 - STAR WASHER 8.4x14.5mm - H100610

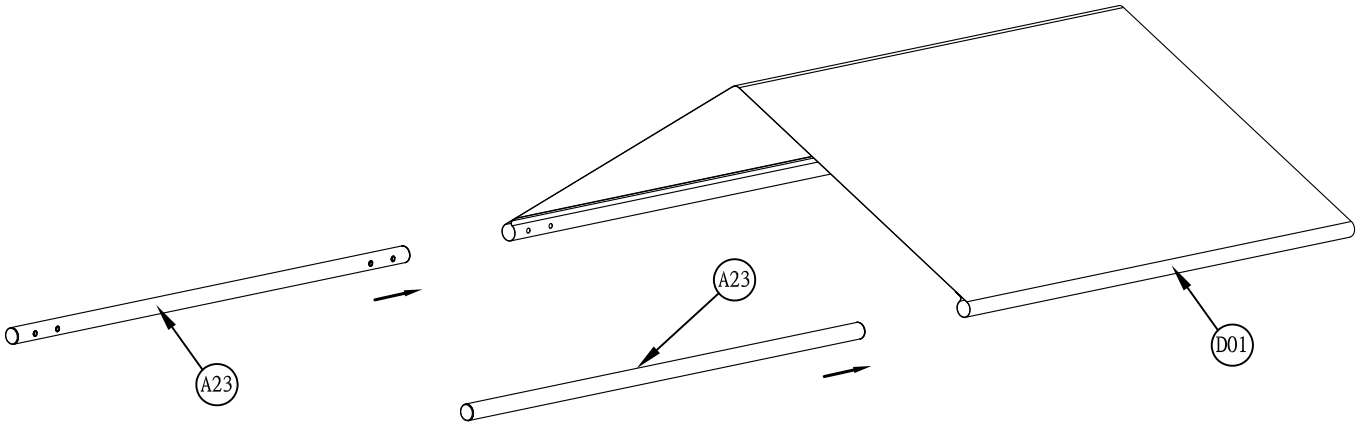

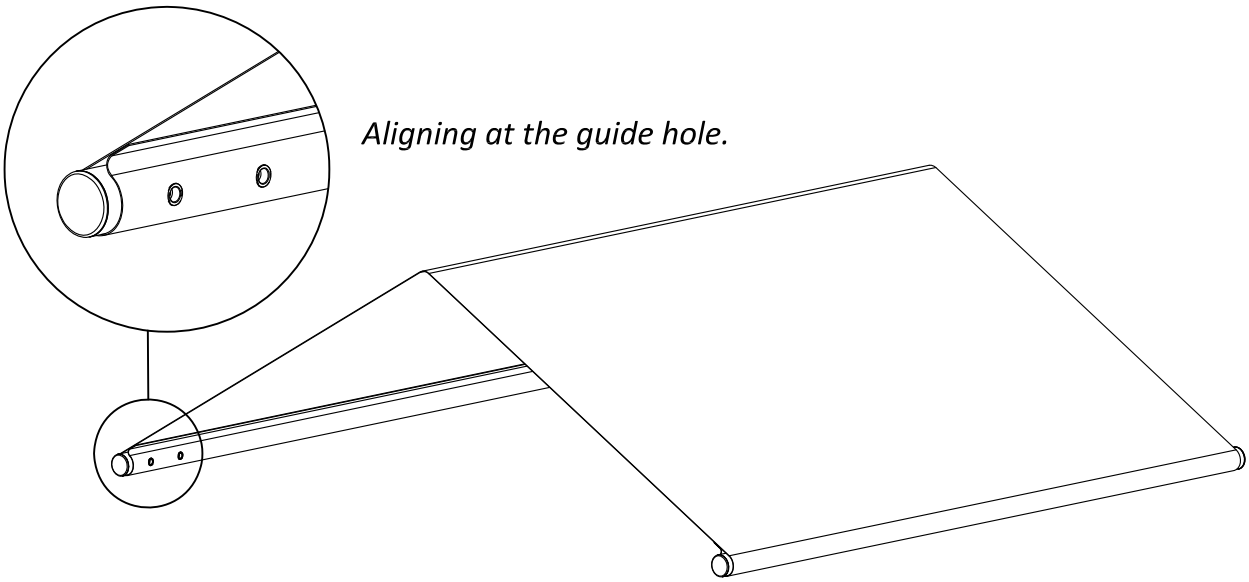

Aligning at the guide hole.

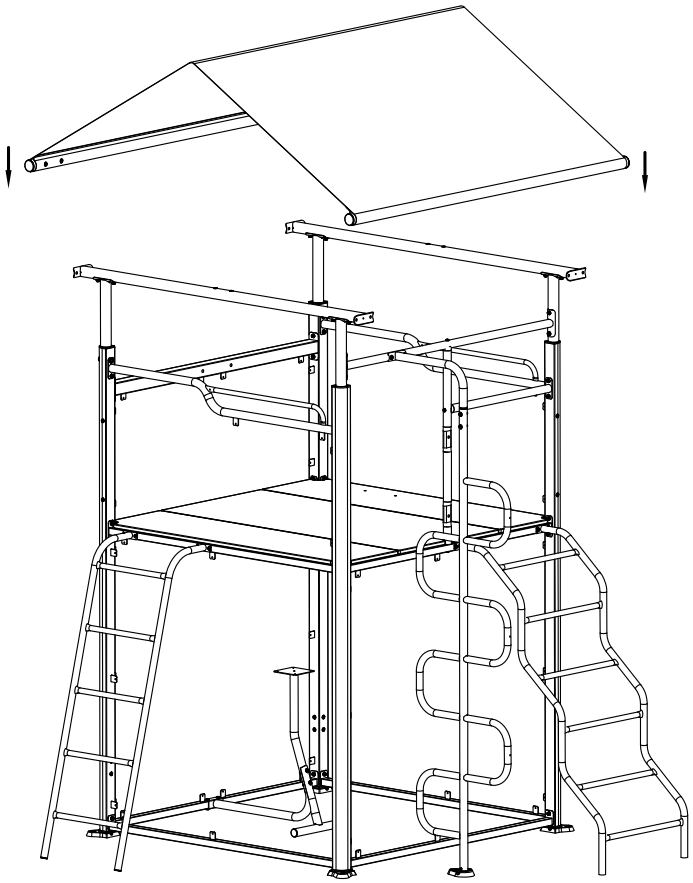

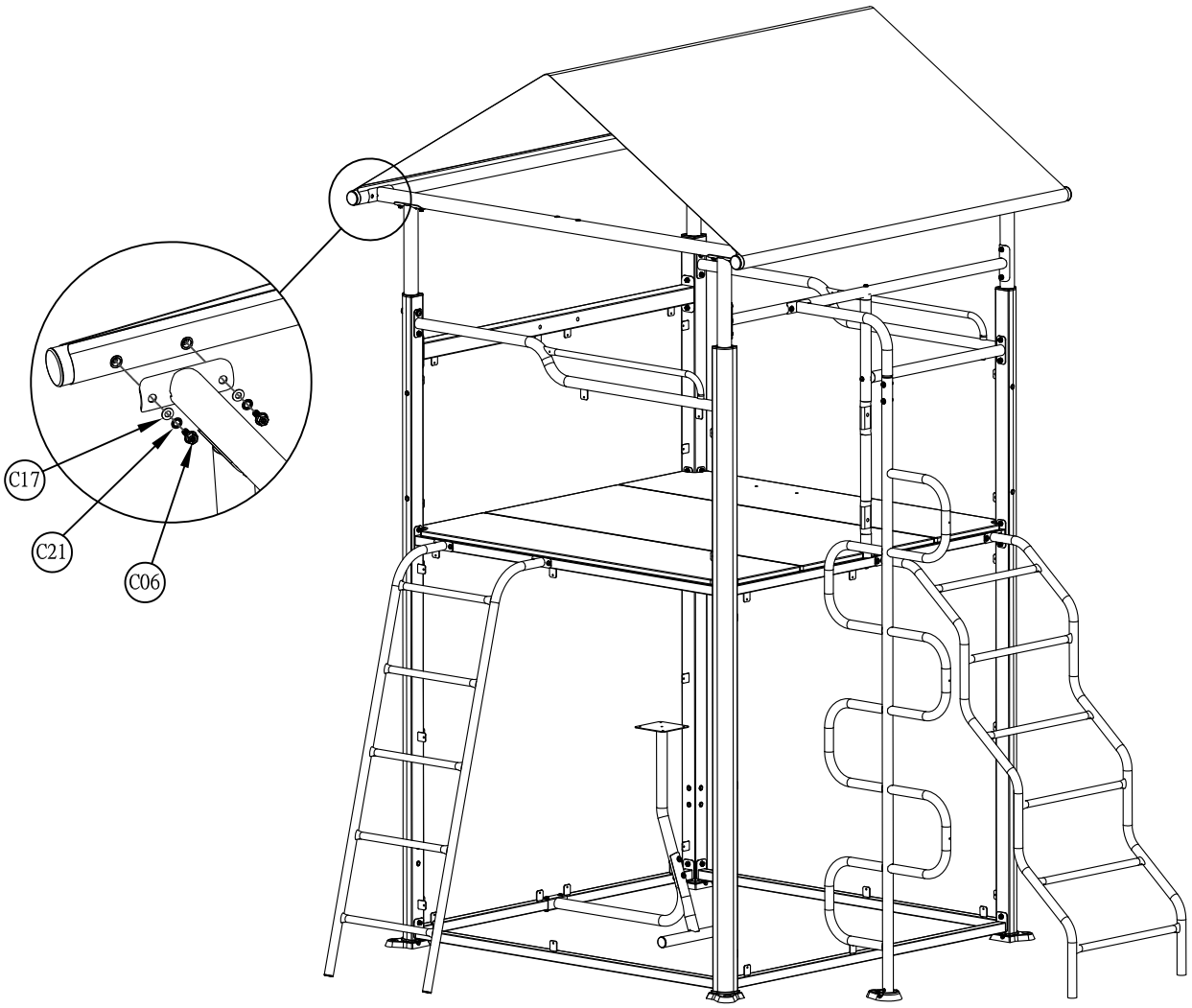
C17
C21
C06

STEP 13

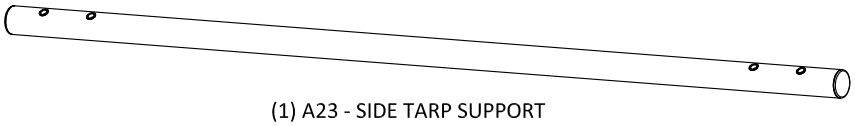

(1) A23 - SIDE TARP SUPPORT
- A4M00781

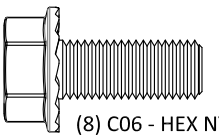

(8) C06 - HEX NY-LOCK
SCREW WITH PAD
5/16x20mm - H100596

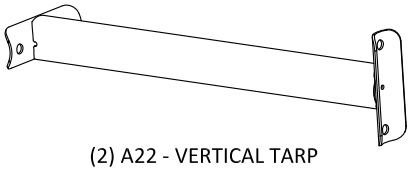

(2) A22 - VERTICAL TARP
SUPPORT - A4M00780

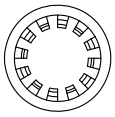

(8) C21 - STAR WASHER
8.4x14.5mm - H100610

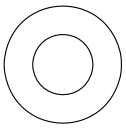

(8) C17 - STEEL WASHER
8.2x16mm - H100608

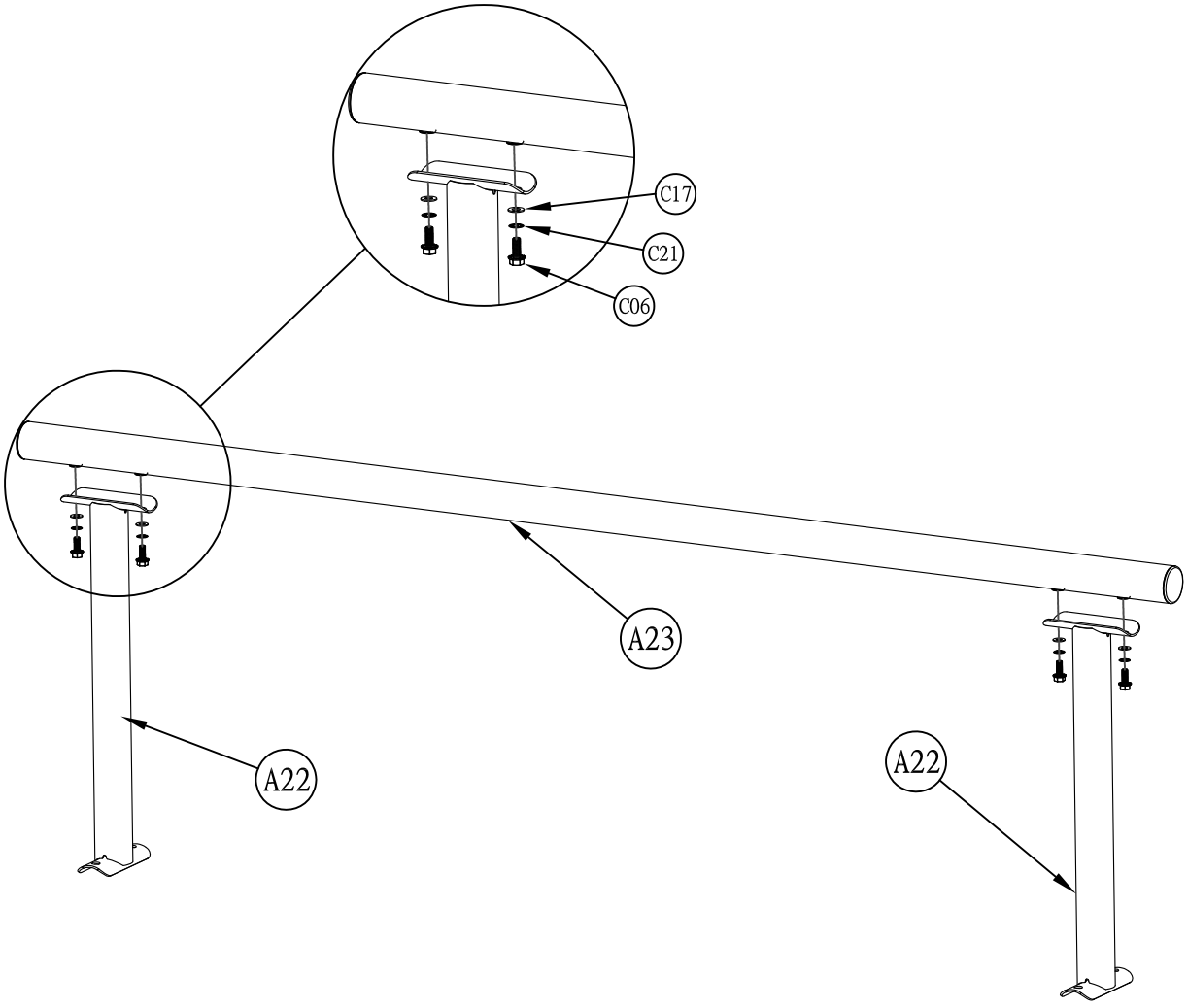

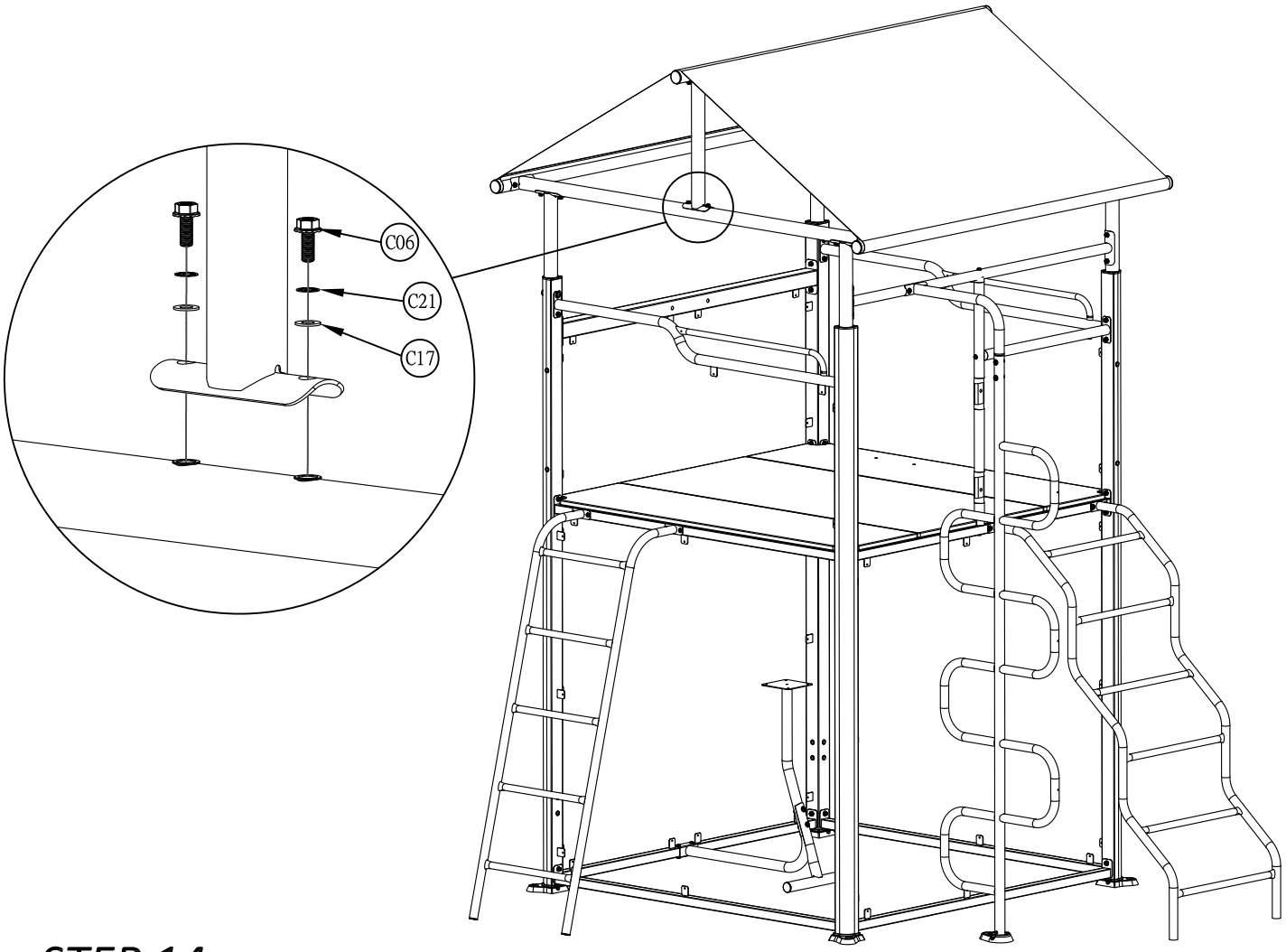

STEP 14

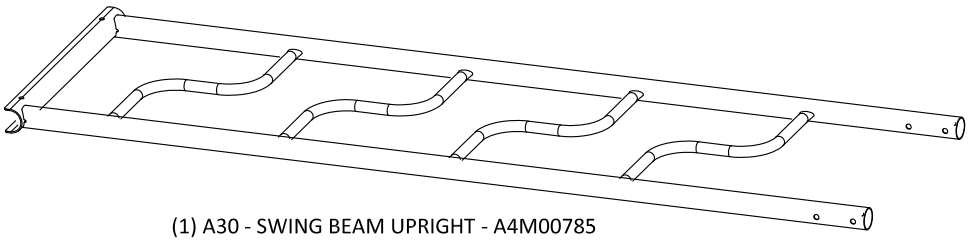

(1) A30 - SWING BEAM UPRIGHT - A4M00785

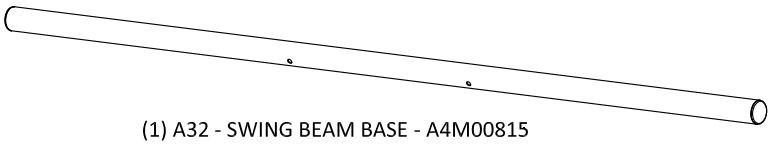

(1) A32 - SWING BEAM BASE - A4M00815

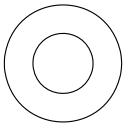

(2) C17 - STEEL WASHER
8.2x16mm - H100608

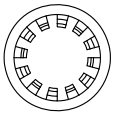

(2) C21 - STAR WASHER
8.4x14.5mm - H100610

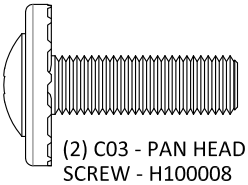

(2) C03 - PAN HEAD TORX NY-LOCK
SCREW - H100008

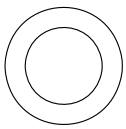

(2) C18 - STEEL WASHER
10.5x16mm - H100607

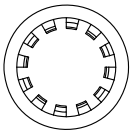

(2) C22 - STAR WASHER
3/8 - H100611

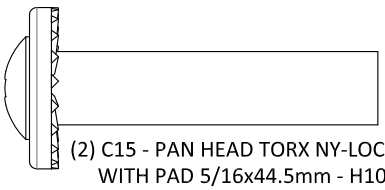

(2) C15 - PAN HEAD TORX NY-LOCK NUT
WITH PAD 5/16x44.5mm - H100620

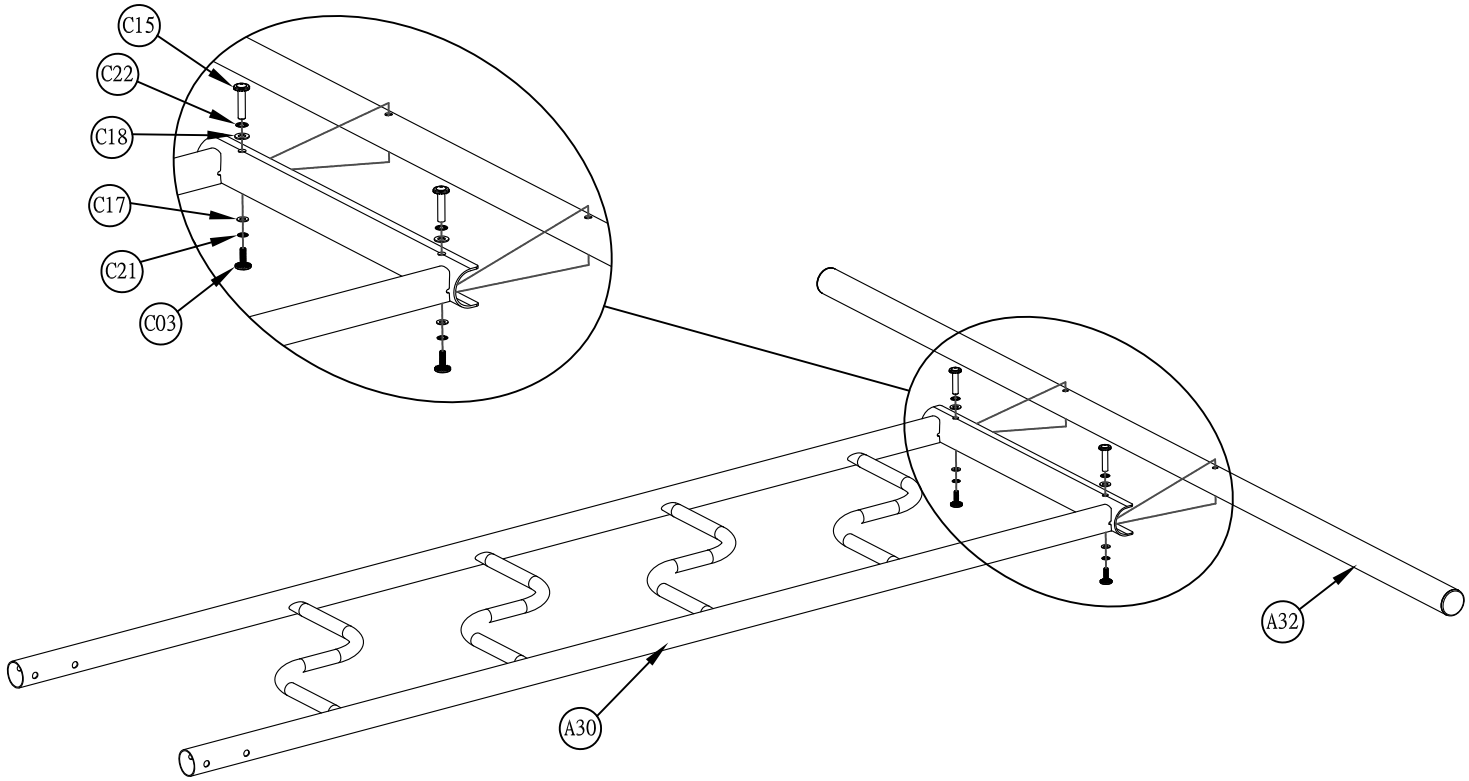

STEP 15

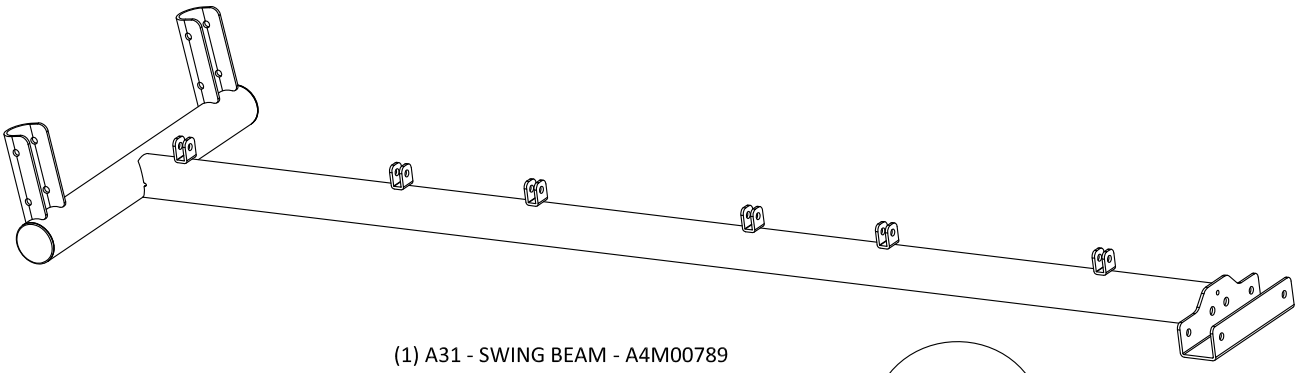

(1) A31 - SWING BEAM - A4M00789

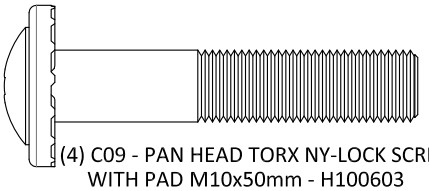

(4) C09 - PAN HEAD TORX NY-LOCK SCREW
WITH PAD M10x50mm - H100603

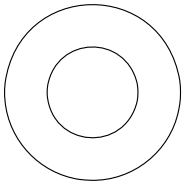

(8) C19 - STEEL WASHER
12.4x24mm - H100609

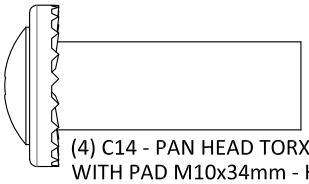

(4) C14 - PAN HEAD TORX NY-LOCK NUT
WITH PAD M10x34mm - H100604

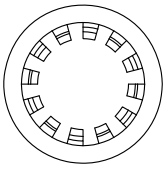

(8) C23 - STAR WASHER
12.4x21.6mm - H100612

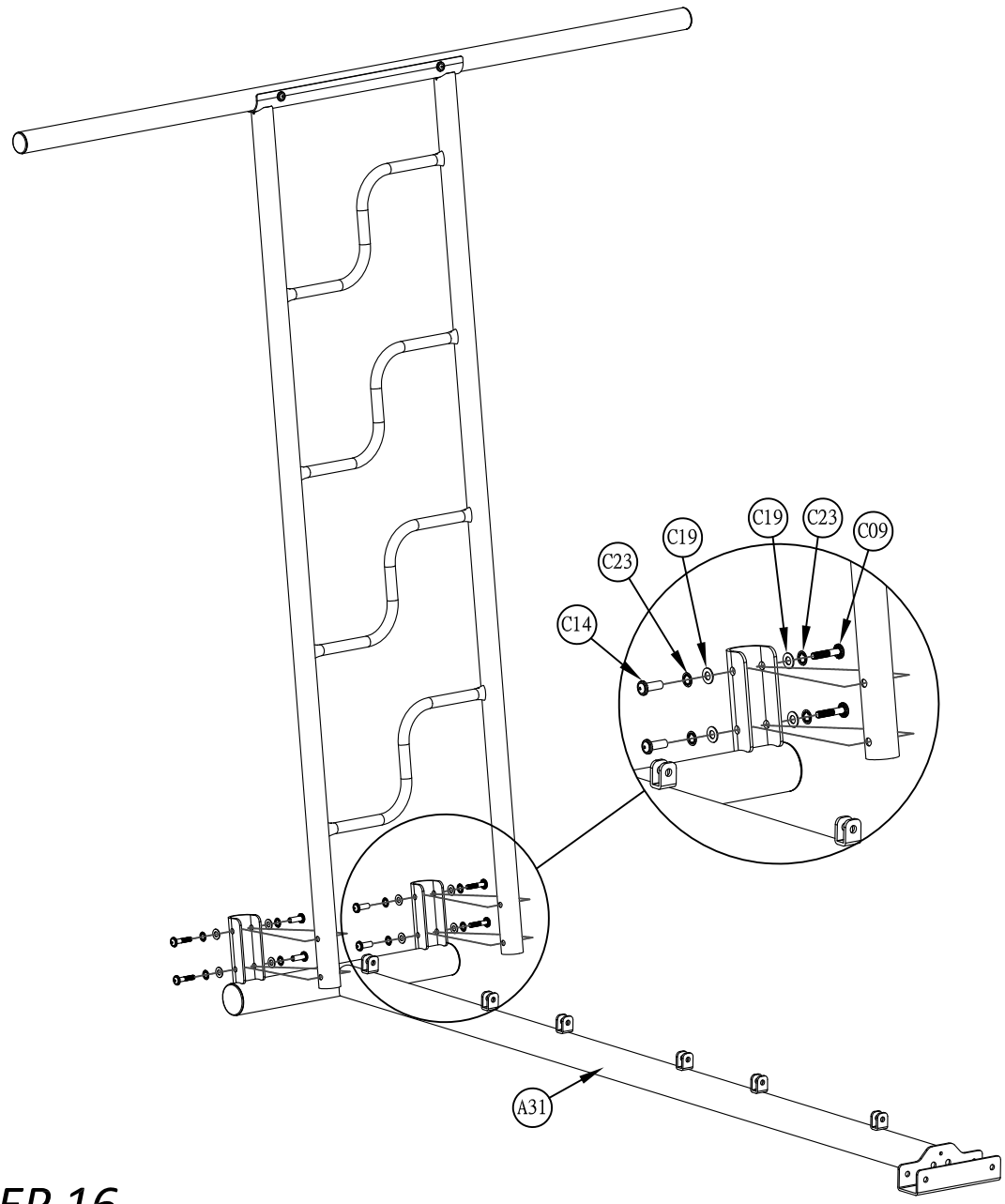

STEP 16

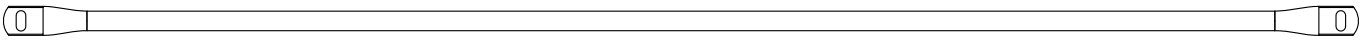

(1) A37 - CROSS BAR - A4M00888

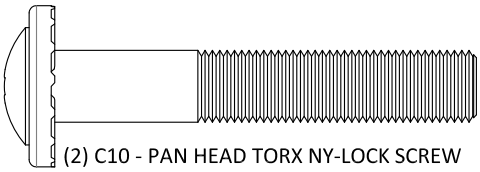

(2) C10 - PAN HEAD TORX NY-LOCK SCREW
M10x58mm - H100602

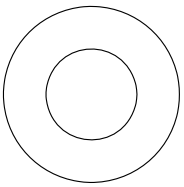

(4) C19 - STEEL WASHER
12.4x24mm - H100609

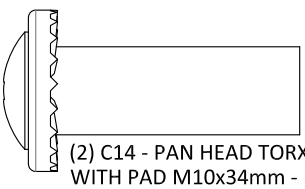

(2) C14 - PAN HEAD TORX NY-LOCK NUT
WITH PAD M10x34mm - H100604

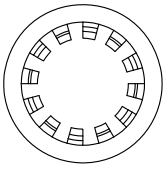

(4) C23 - STAR WASHER
12.4x21.6mm - H100612

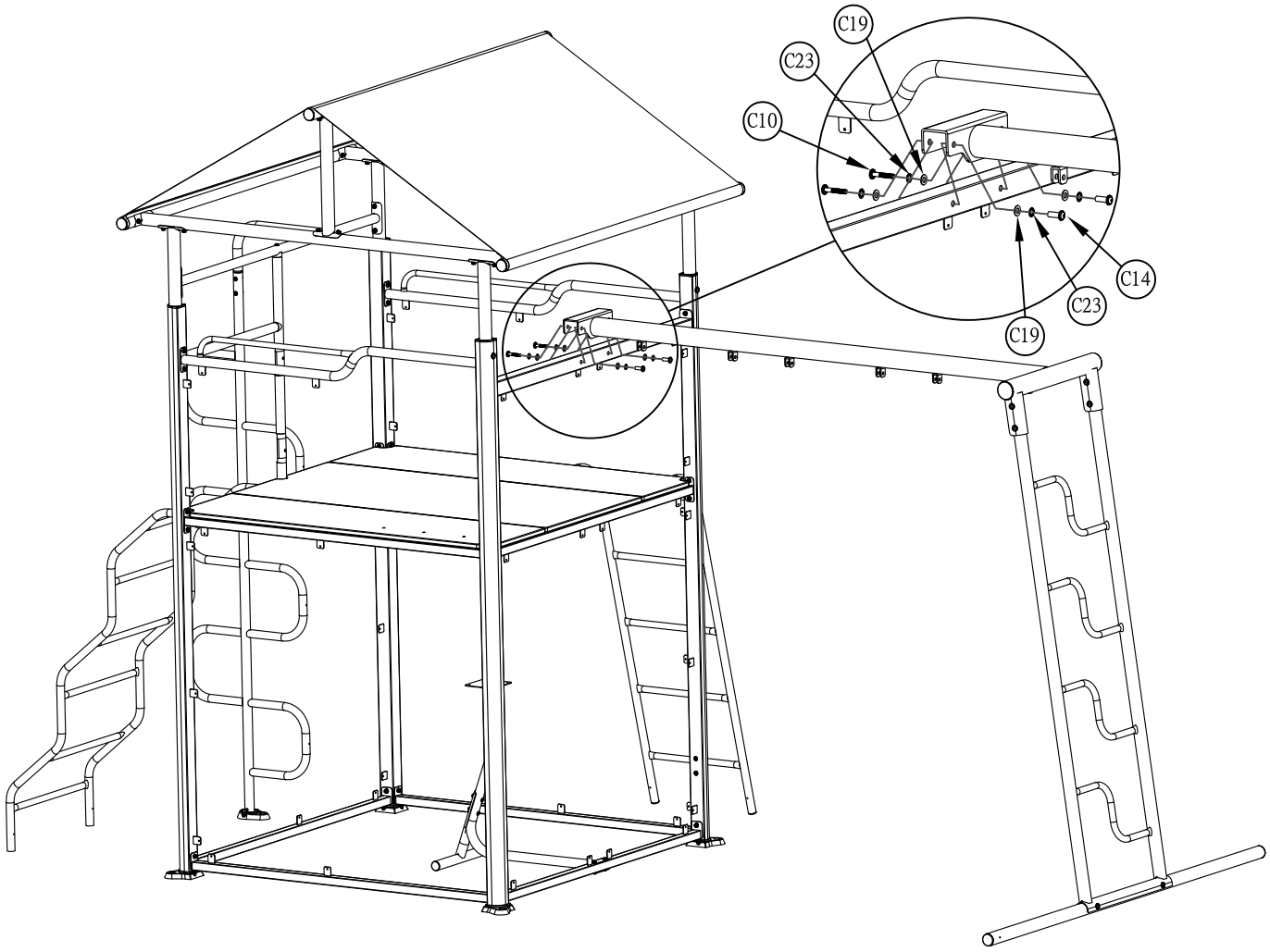
C19
C23
C10
C14
C23
C19

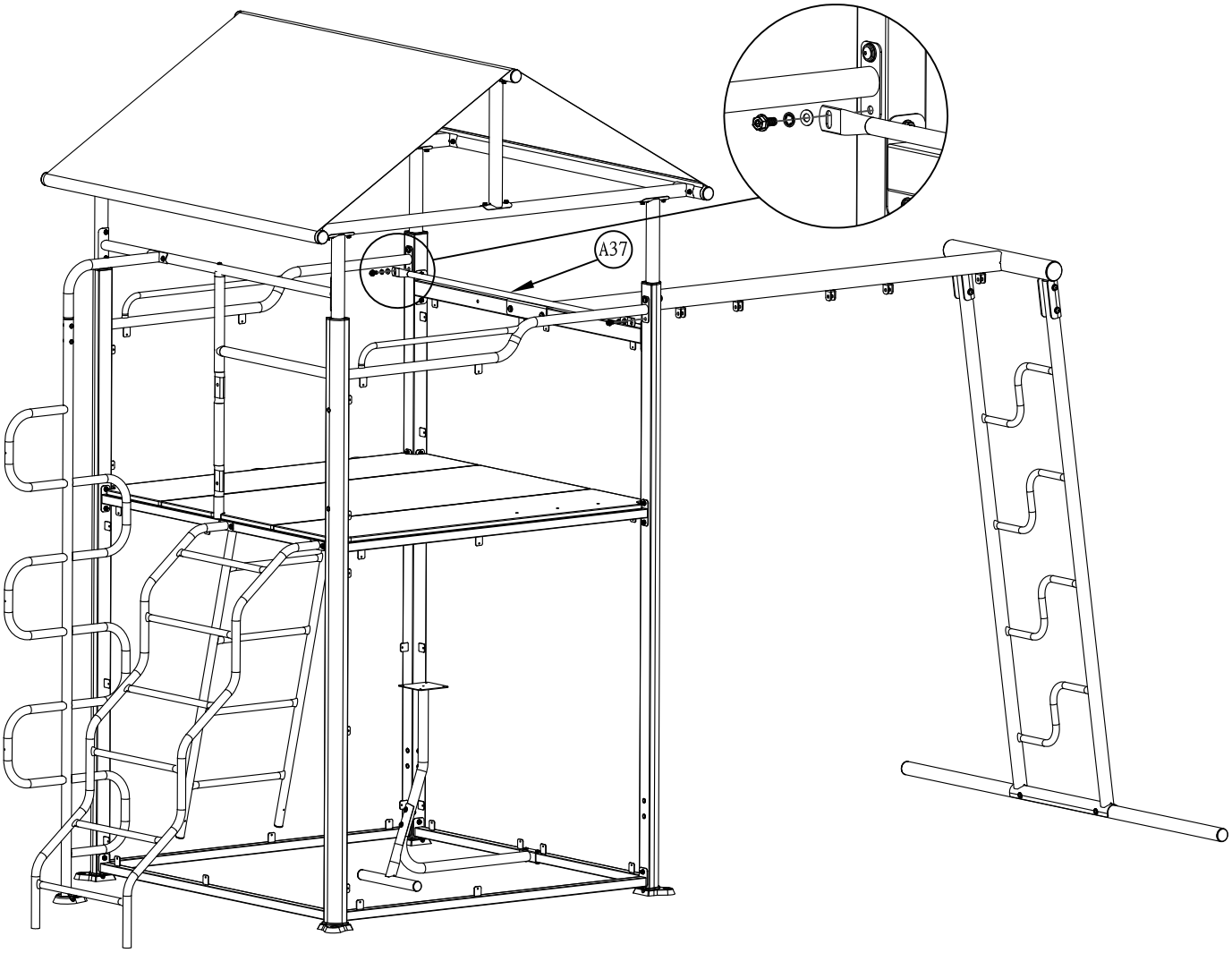
A37

STEP 17

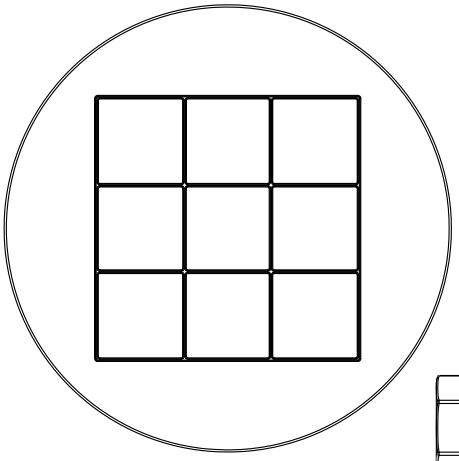

(1) B04 - GAME TABLE TOP - A6P00208

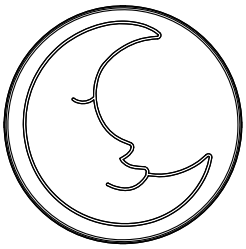

(2) B08 - SEAT WITH MOON - A6P00221

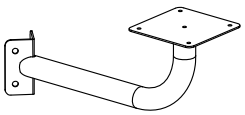

(2) A07 - CHAIR LEG ASSEMBLY - A4M00810

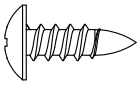

(8) C01 - PAN HEAD PHILLIPS SELF-TAPPING SCREW 5x15mm - H100592

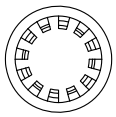

(12) C21 - STAR WASHER 8.4x14.5mm - H100610

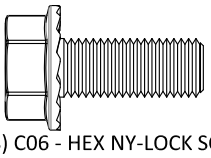

(8) C06 - HEX NY-LOCK SCREW WITH PAD 5/16x20mm - H100596

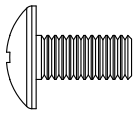

(4) C04 - PAN HEAD PHILLIPS SCREW 1/4x12.7mm - H100598

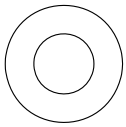

(12) C17 - STEEL WASHER 8.2x16mm - H100608

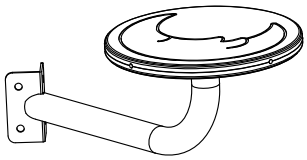

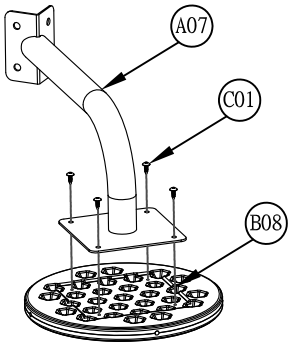

2PCS

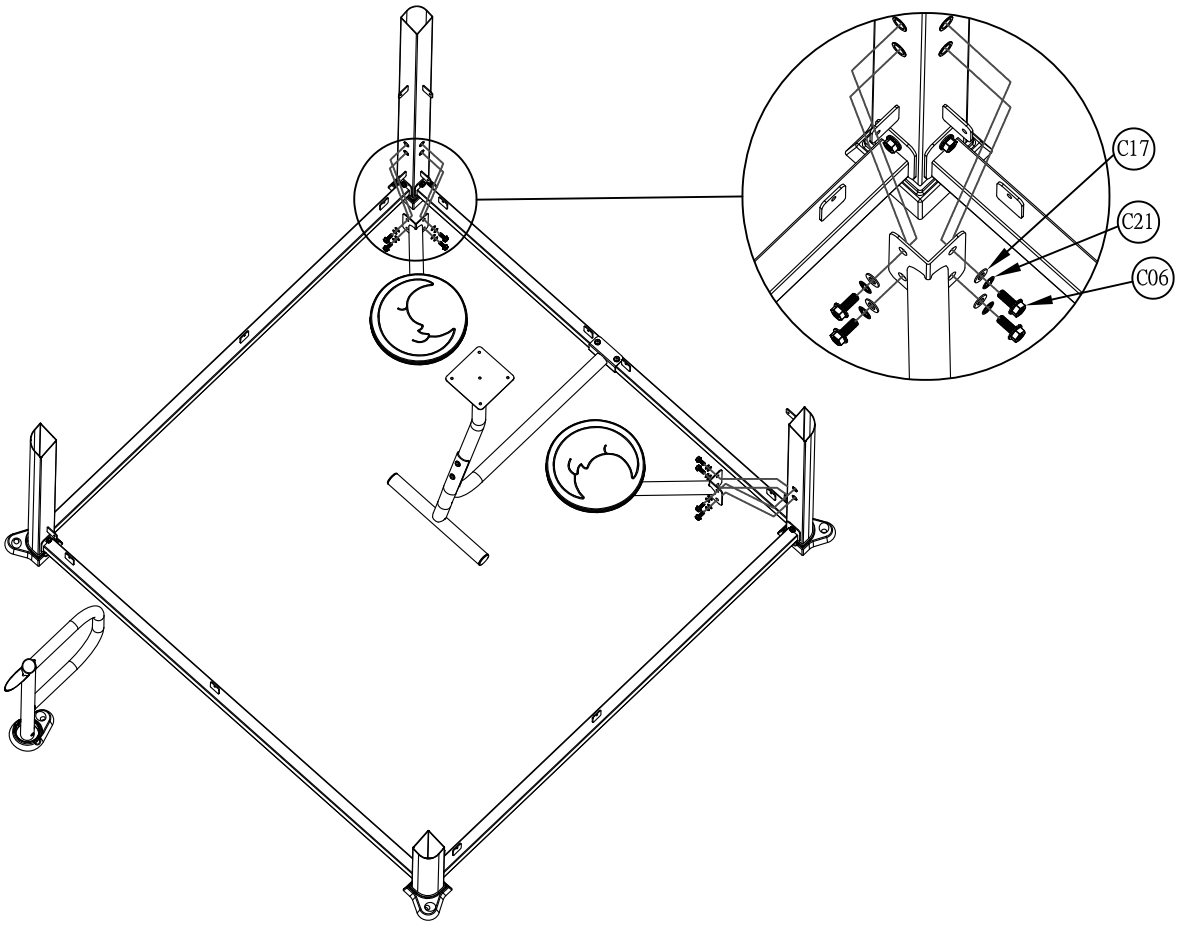

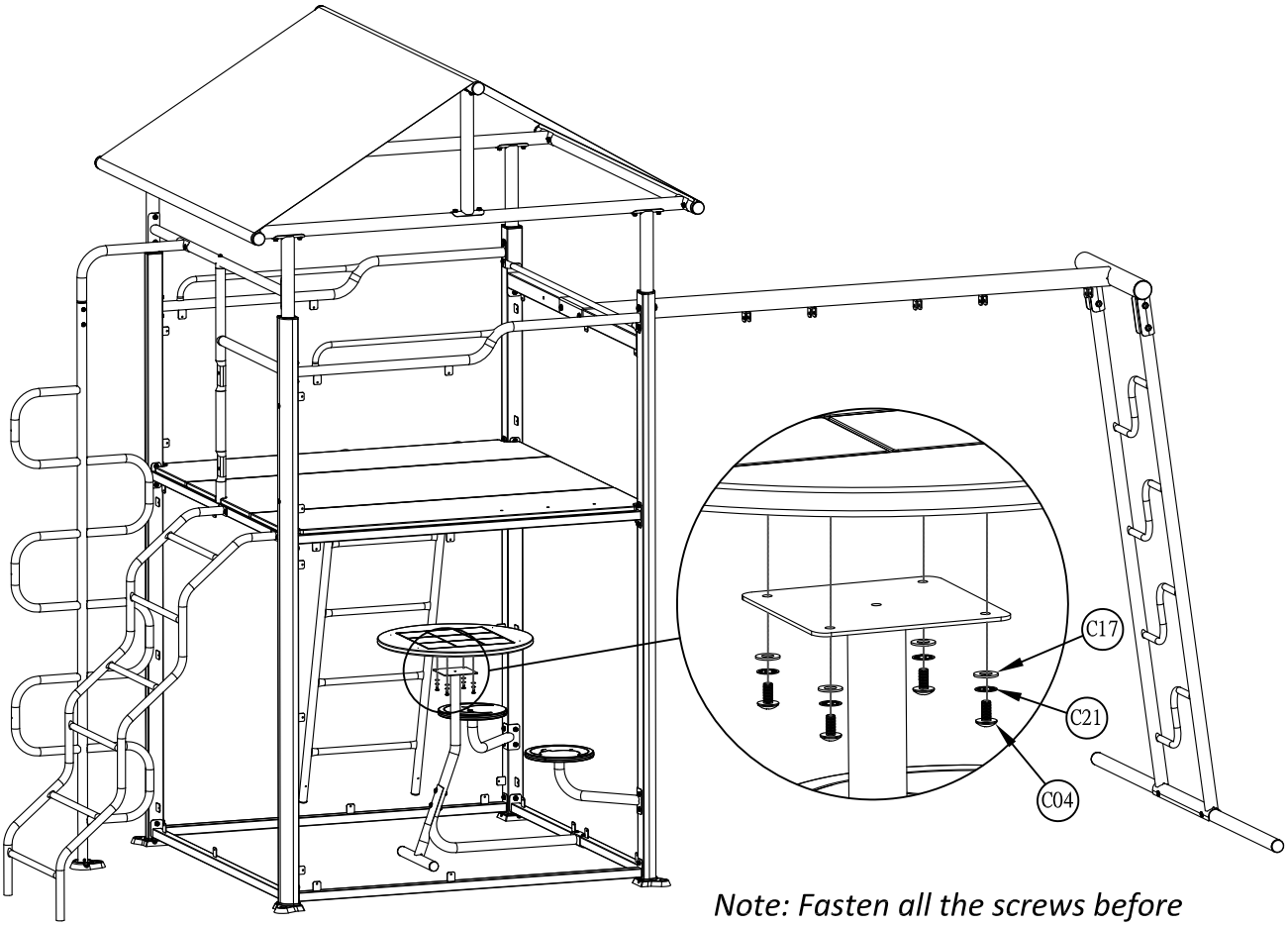

Note: Fasten all the screws before assembling the plastic parts

STEP 18

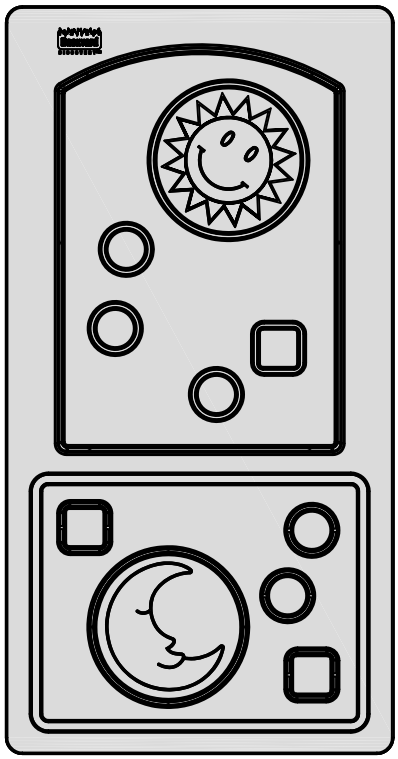

(1) B01 - BOTTOM WALL PANEL-SOLID - A6P00209

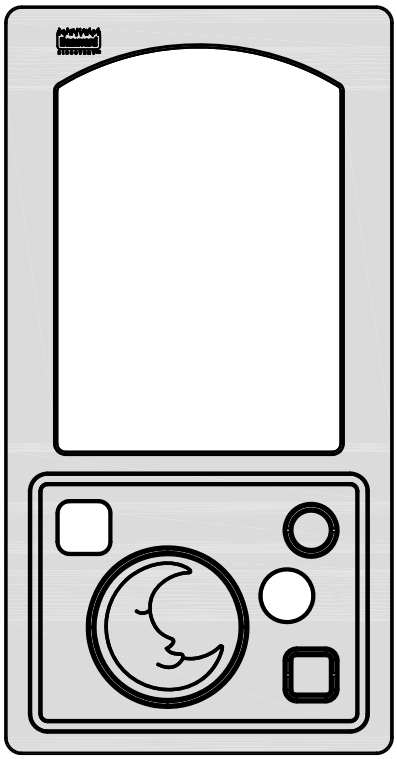

(2) B02 - BOTTOM WALL PANEL-WINDOW - A6P00219

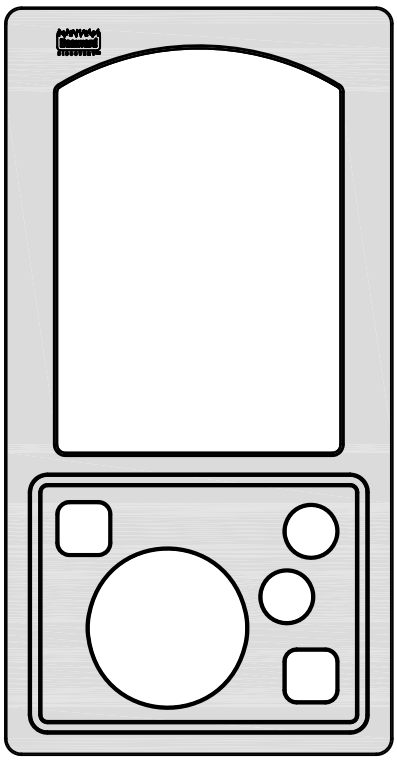

(2) B03 - BOTTOM WALL
PANEL-WINDOW - A6P00220

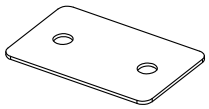

(1) A33 - FORT WALL
CONNECTOR - A4M00816

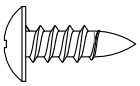

(37) C01 - PAN HEAD PHILLIPS SELF-TAPPING
SCREW 5x15mm - H100592

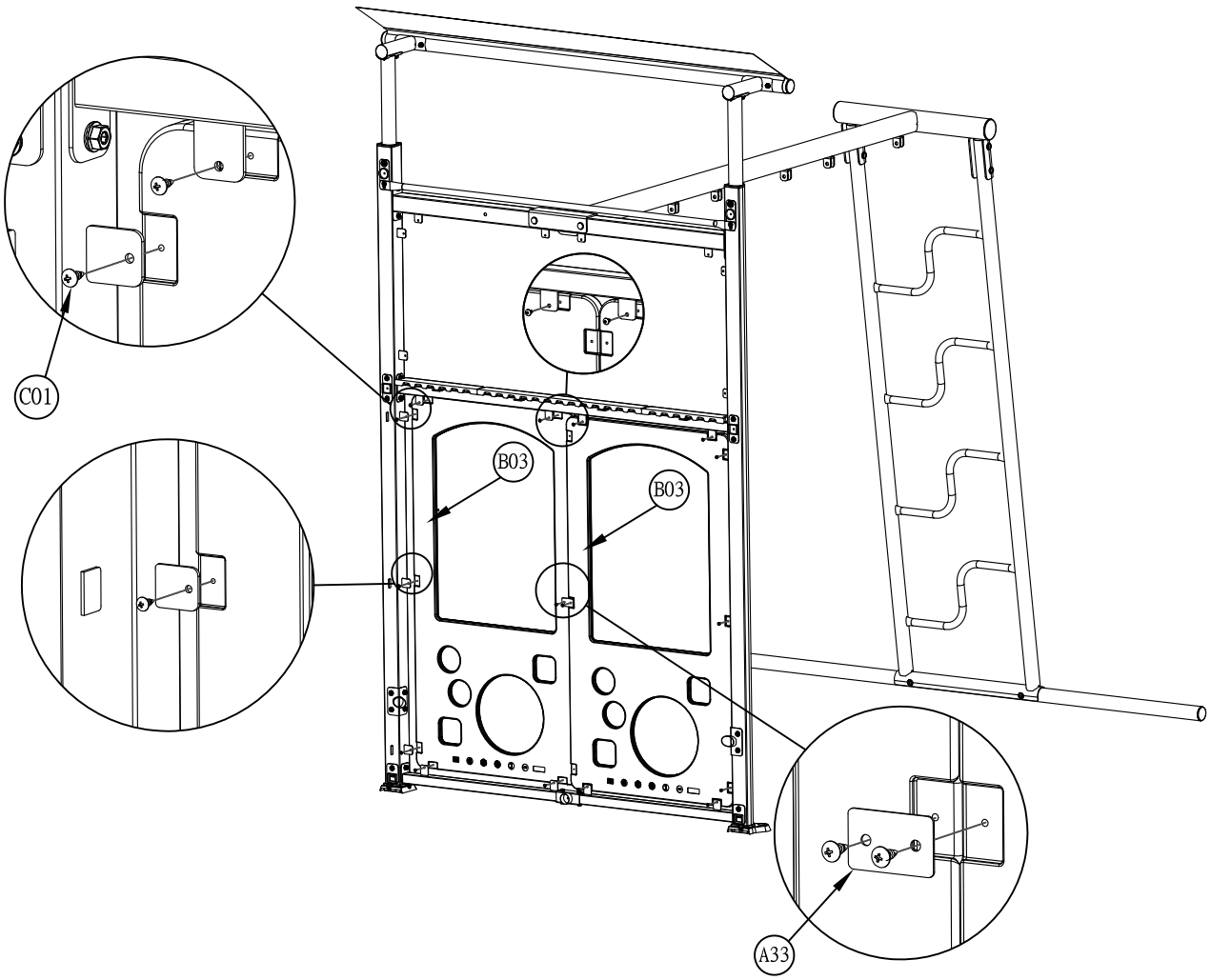

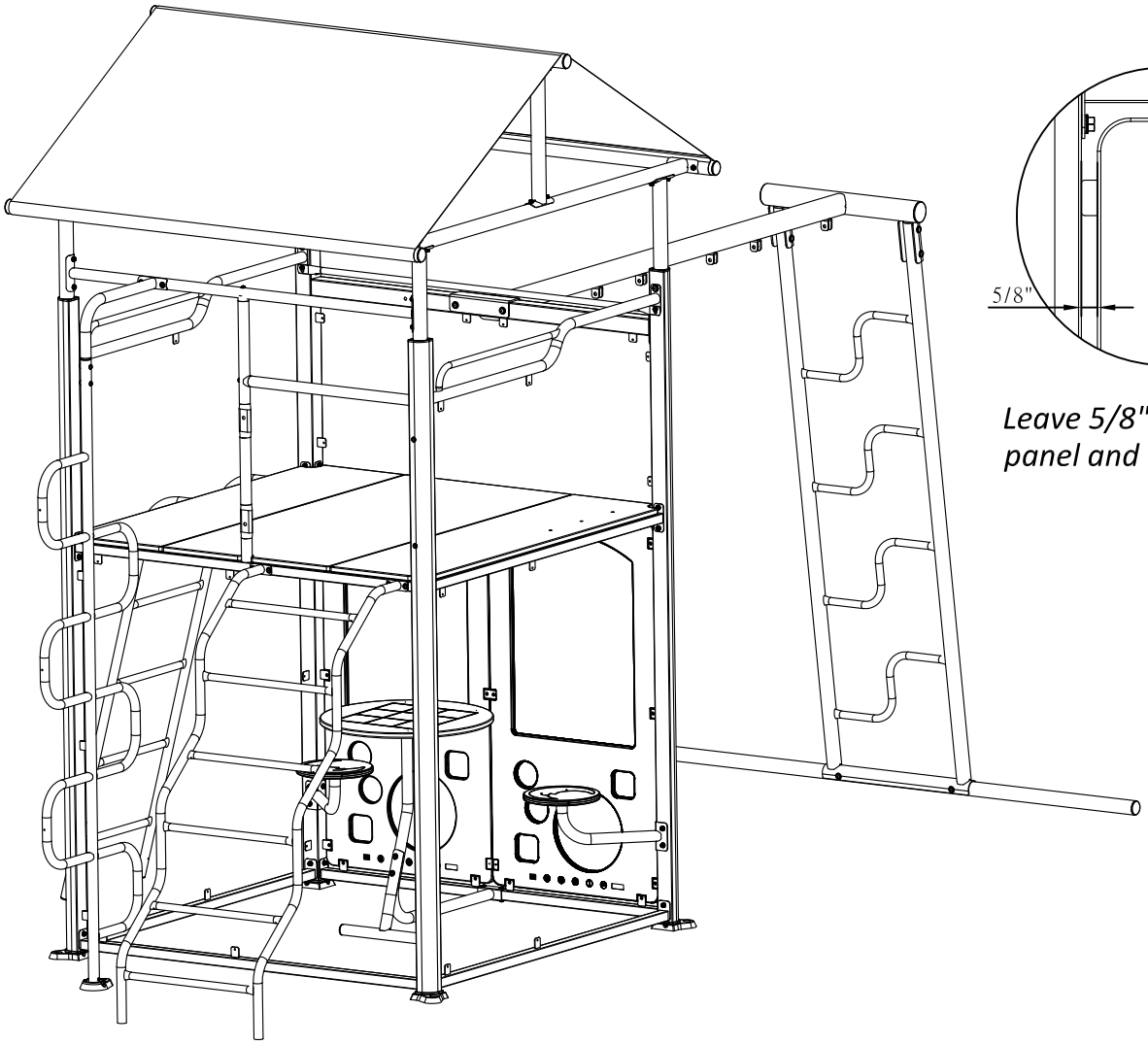

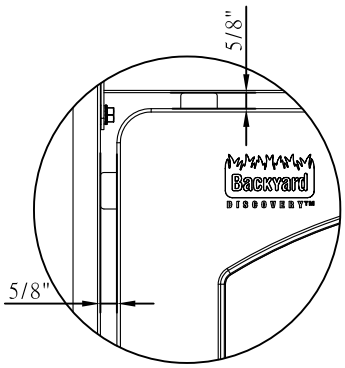

Leave 5/8" between the wall panel and the metal frame

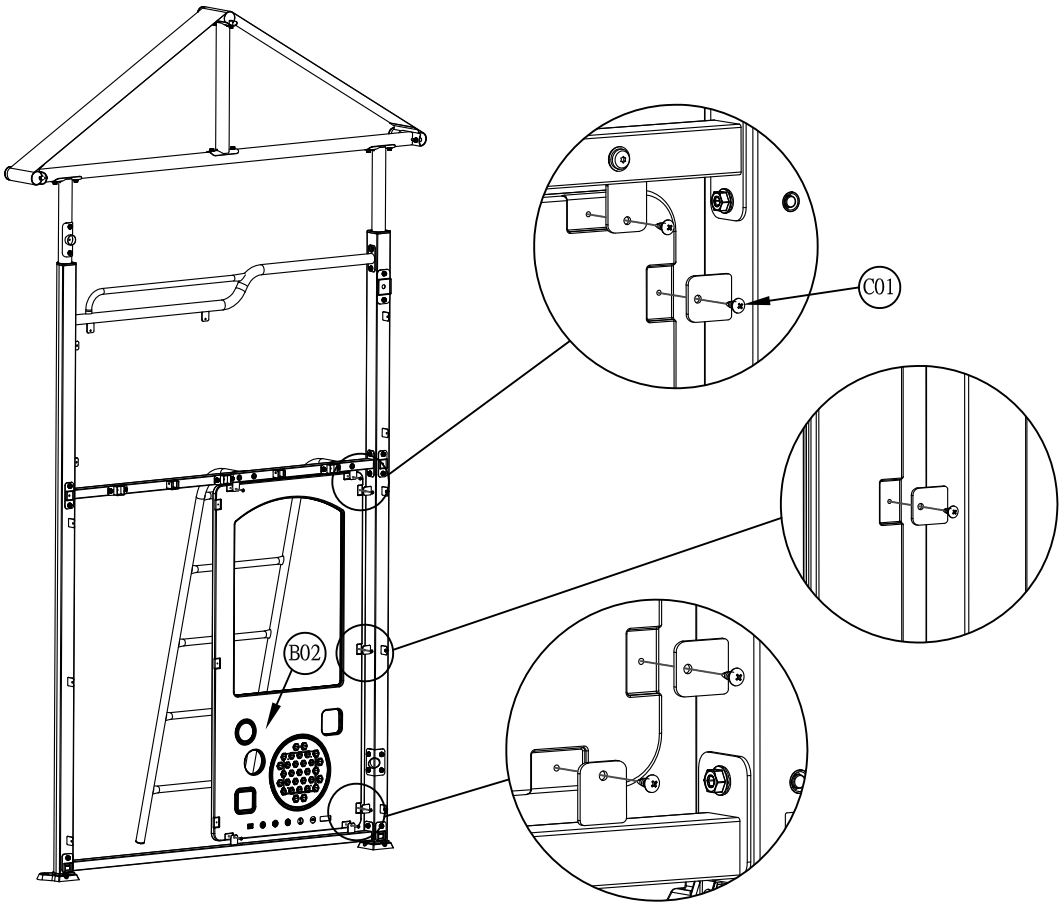

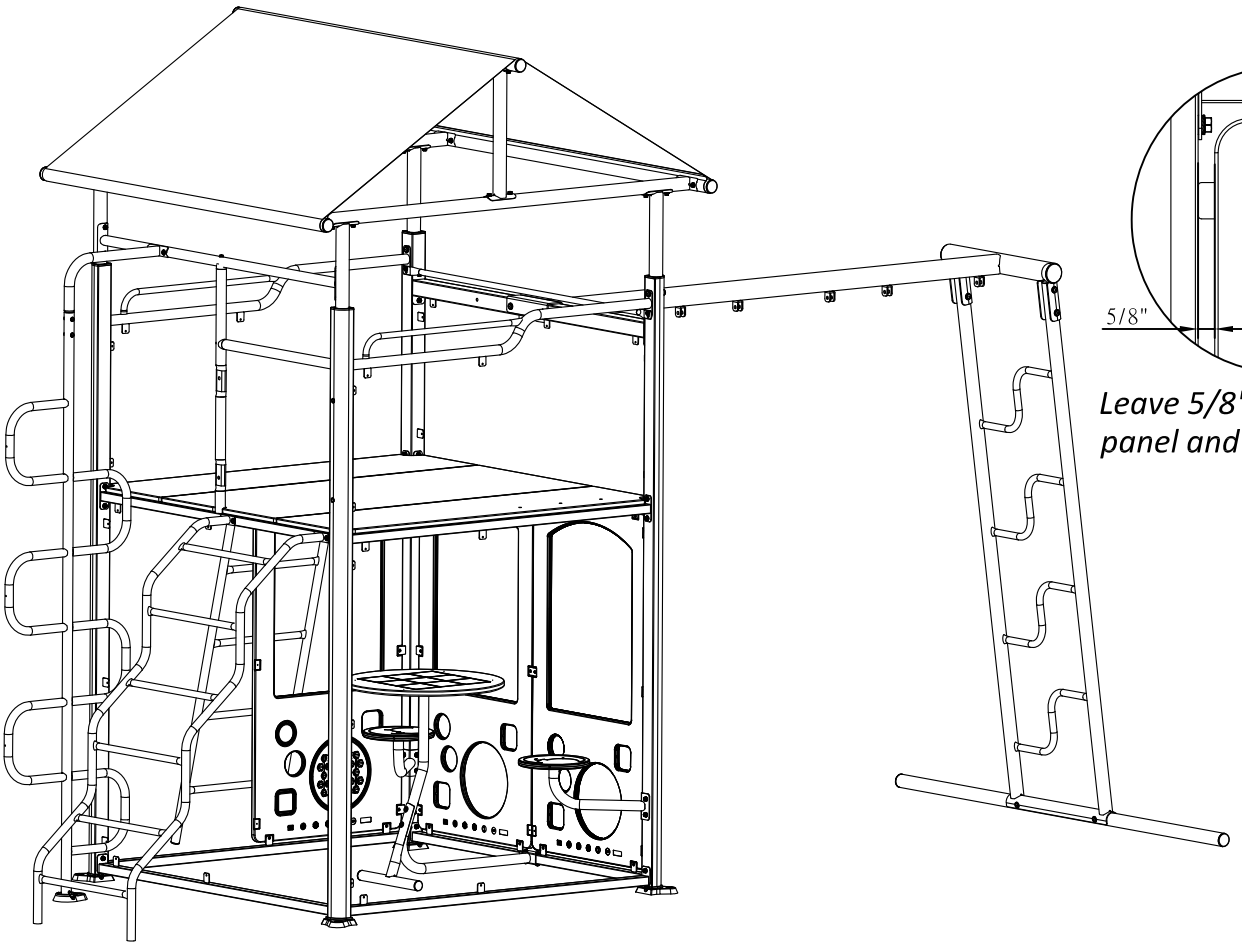

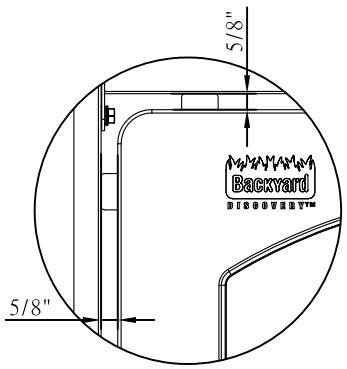

Leave 5/8" between the wall panel and the metal frame

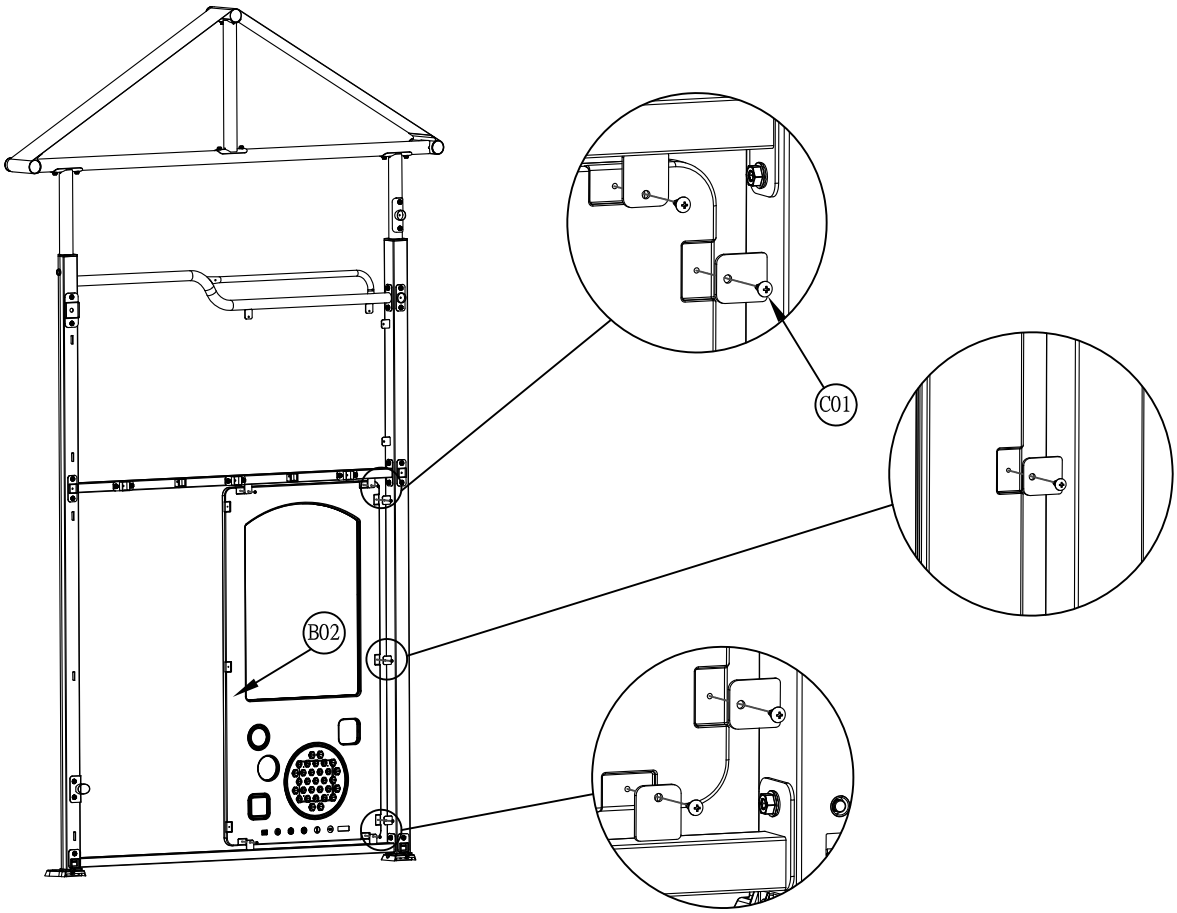

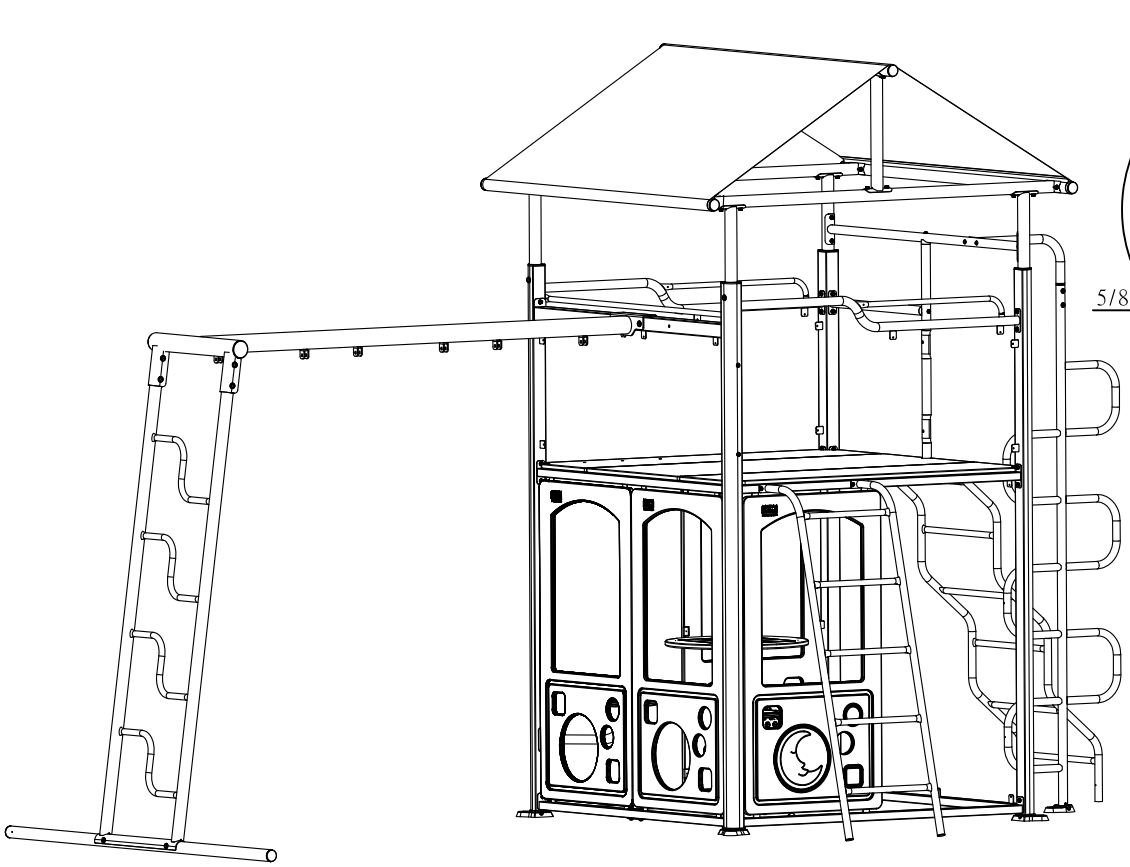

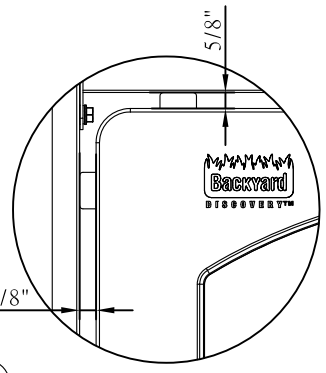

Leave 5/8" between the wall panel and the metal frame

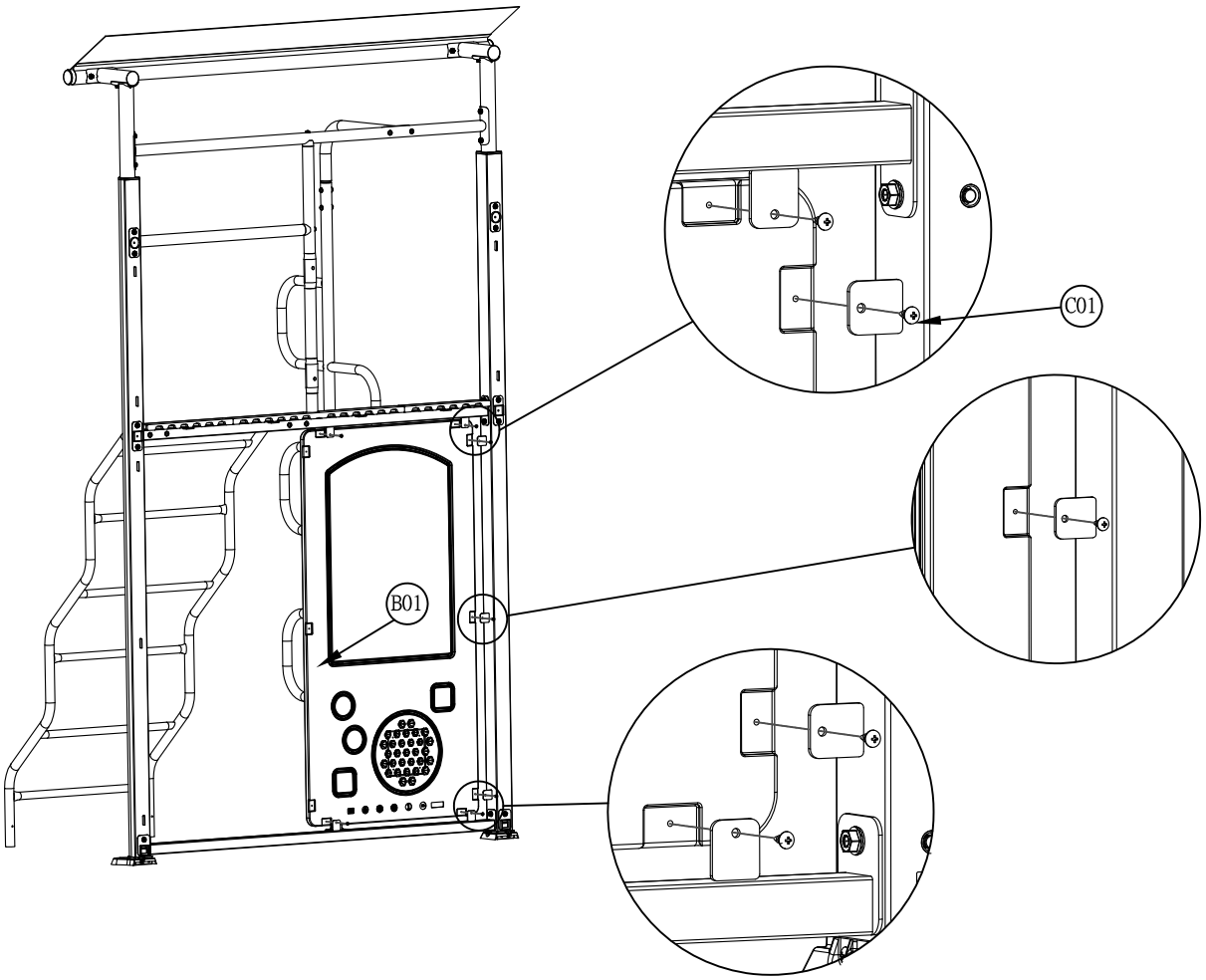

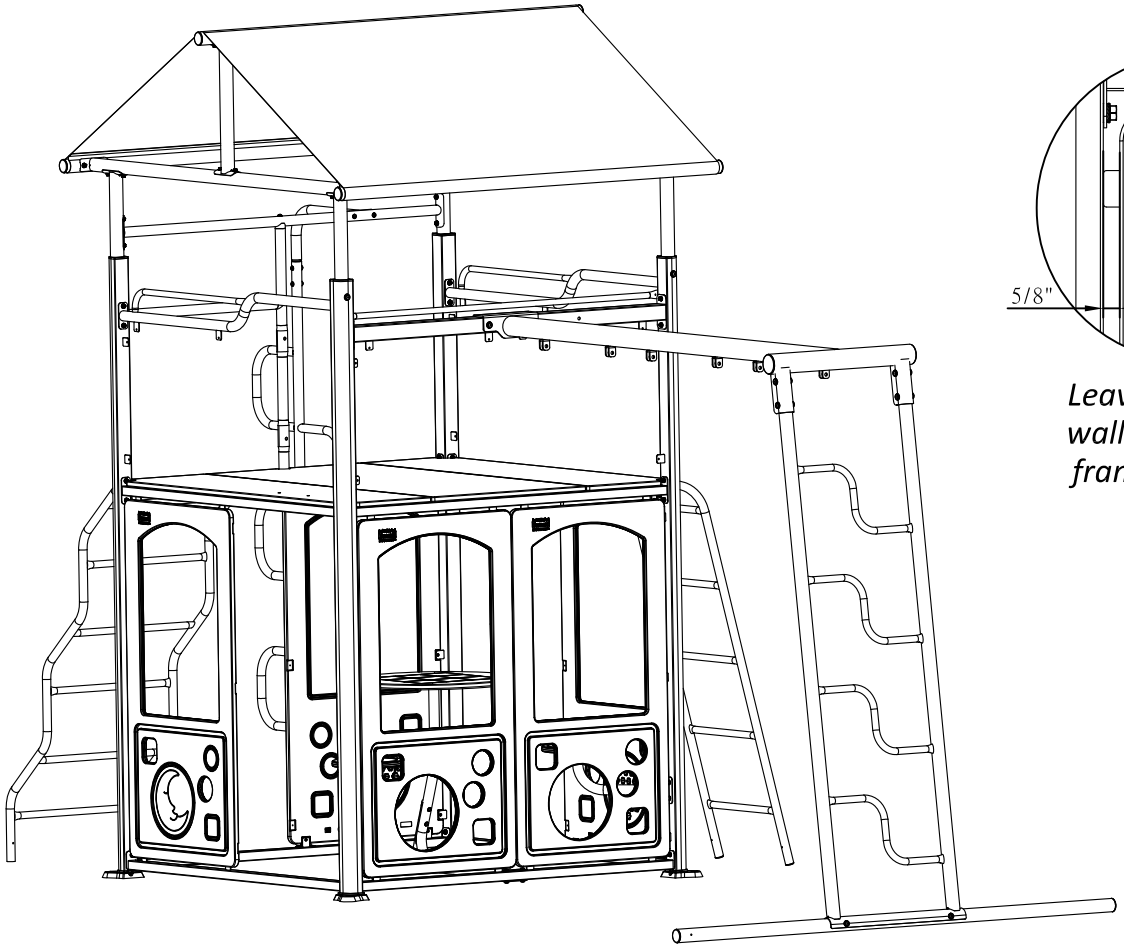

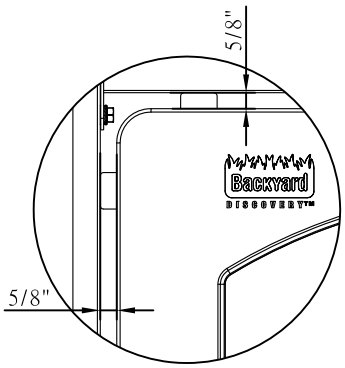

Leave 5/8" between the wall panel and the metal frame

STEP 19

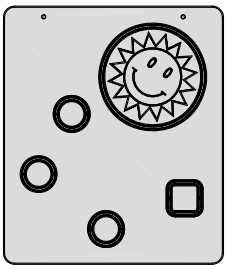

(4) B05 - UPPER WALL PANEL - A6P00222

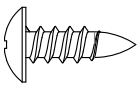

(36) C01 - PAN HEAD PHILLIPS SELF-TAPPING SCREW 5x15mm - H100592

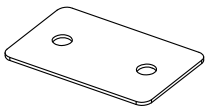

(2) A33 - FORT WALL CONNECTOR - A4M00816

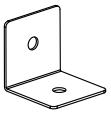

(8) A35 - L BRACKET - A4M00818

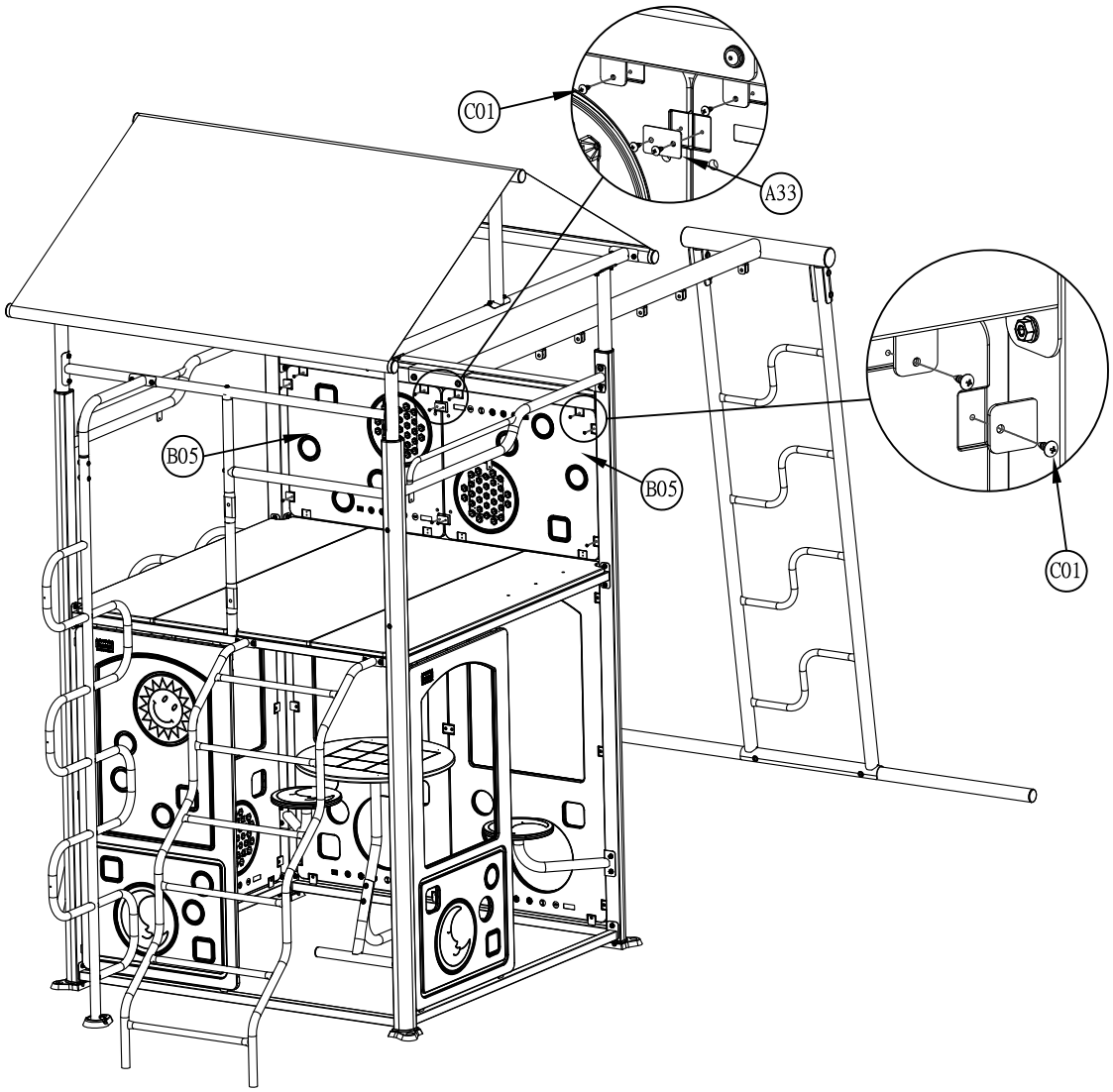

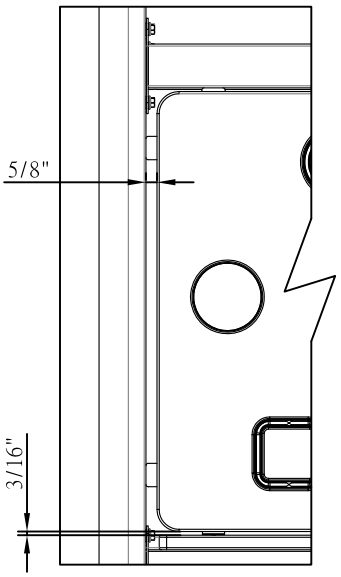

Leave 5/8" between wall panel and metal frame. 3/16" distance between wall panel and floor panel

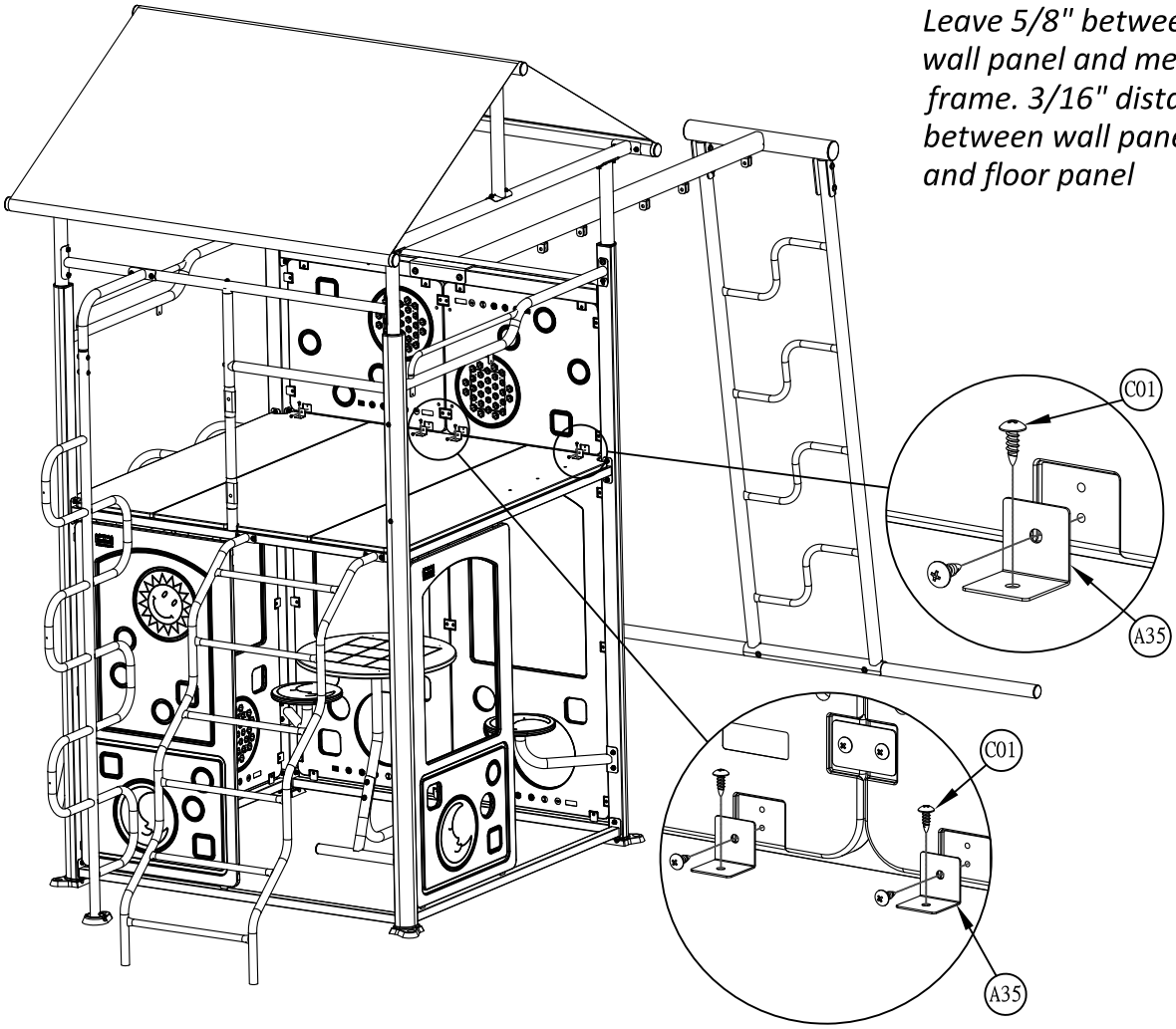

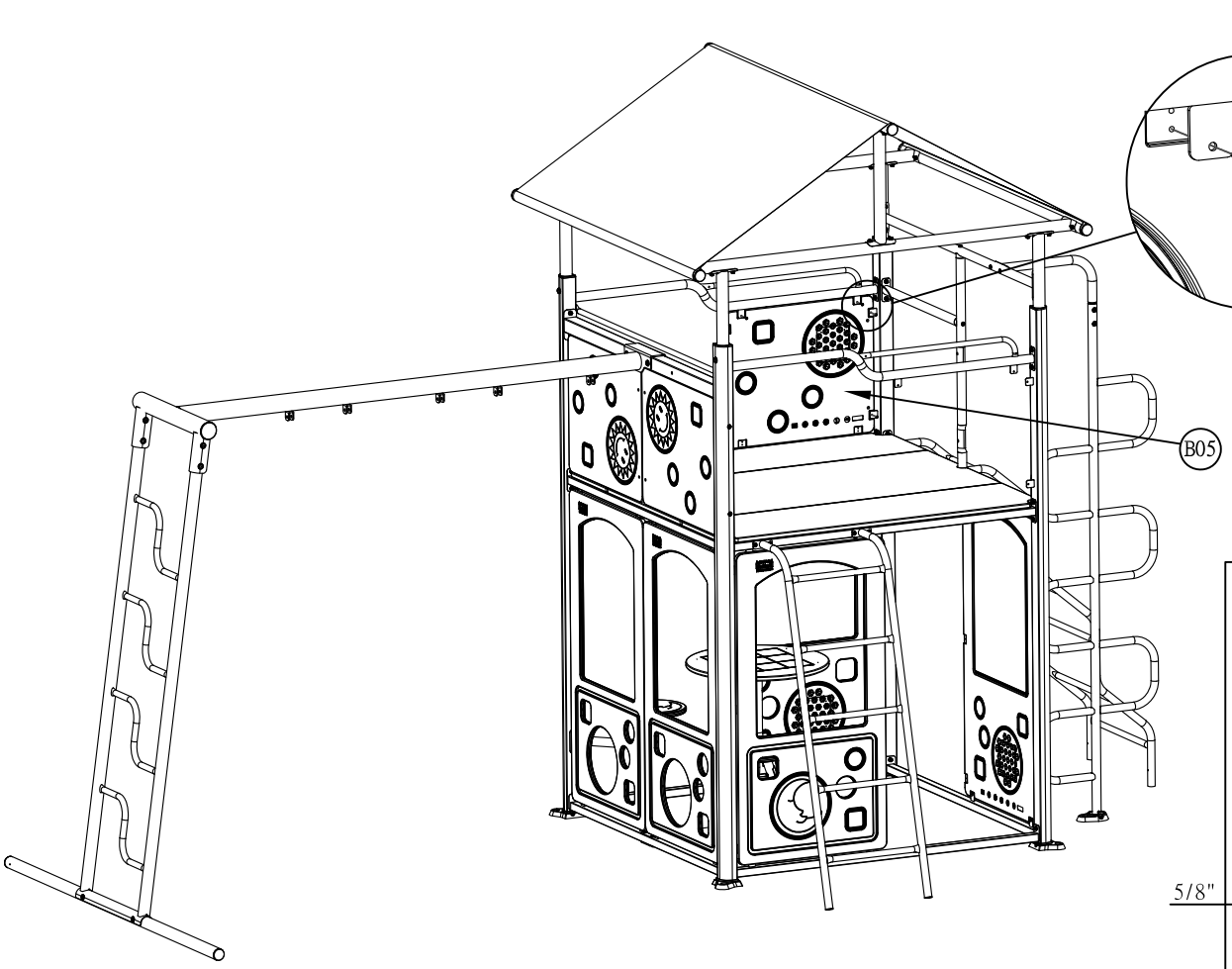

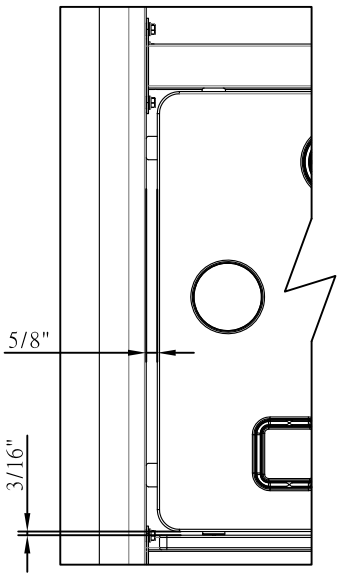

Leave 5/8" between wall panel and metal frame. 3/16" distance between wall panel and floor panel

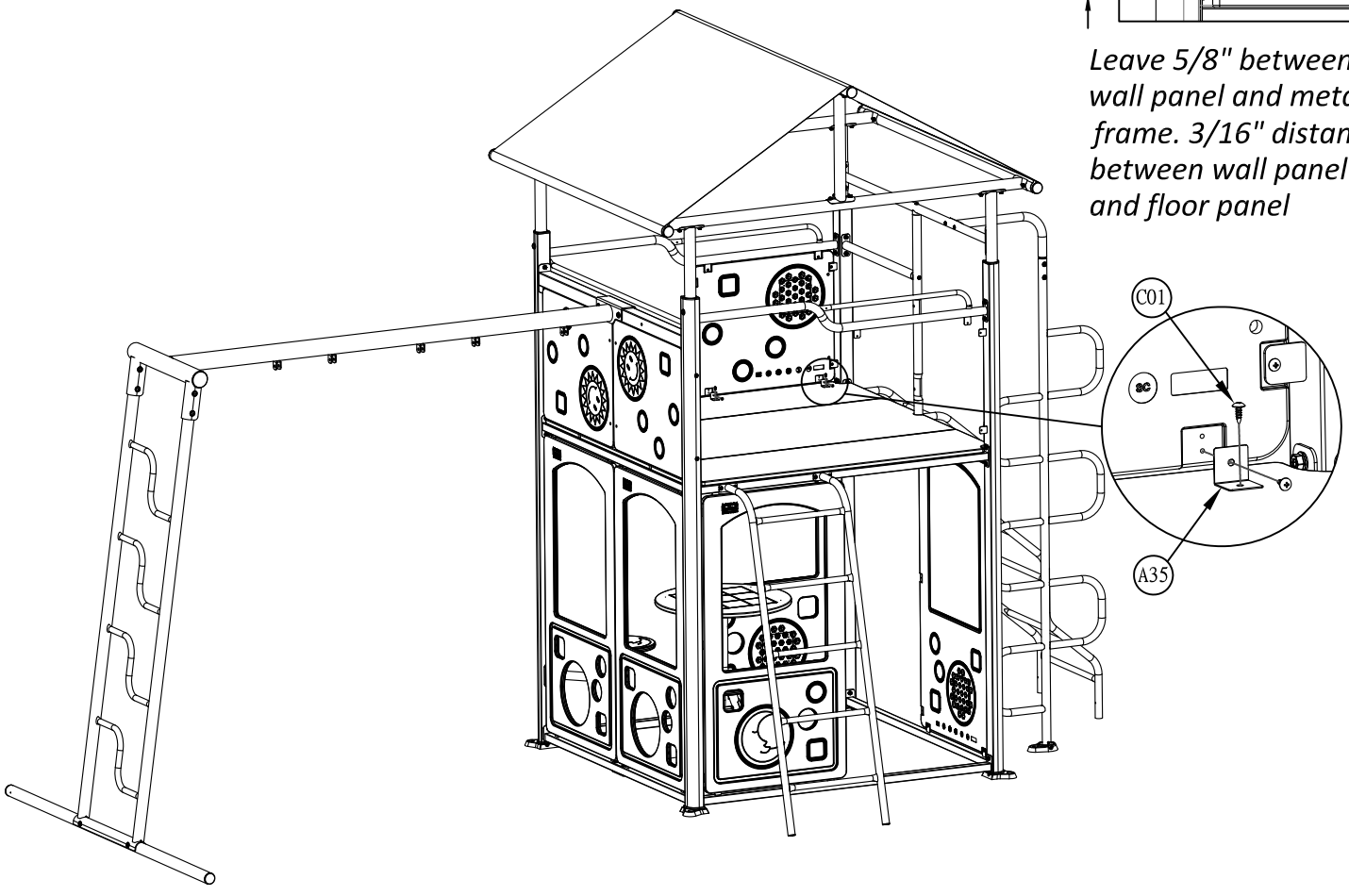

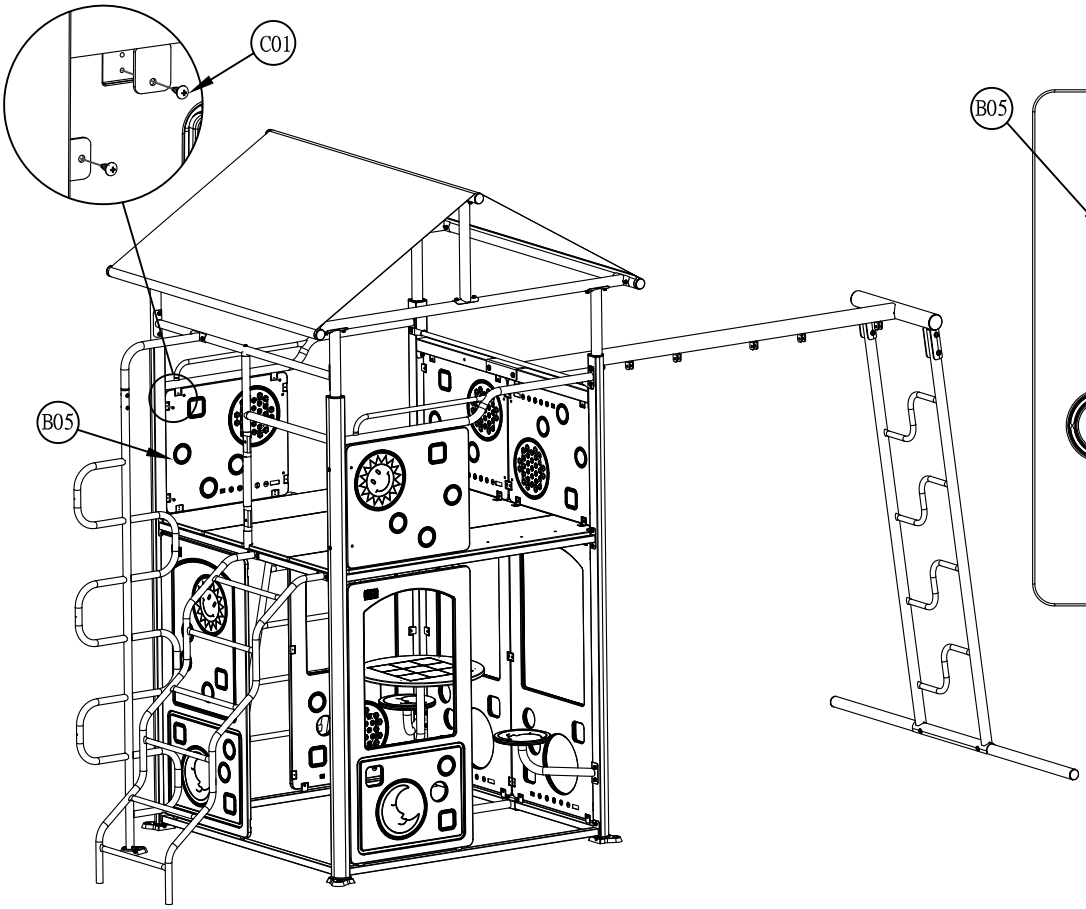

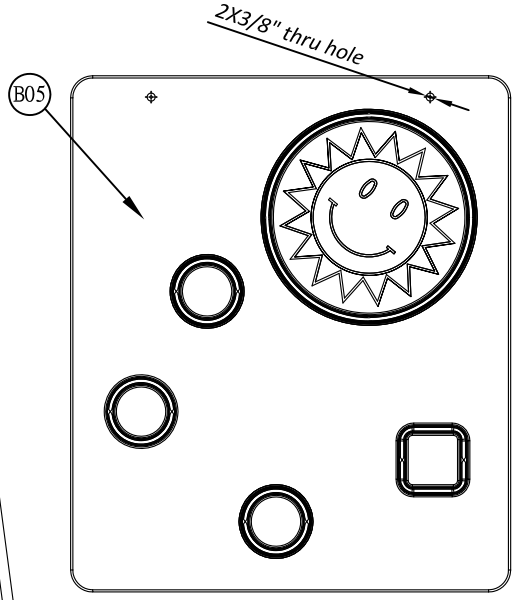

Drill the hole through the guide hole

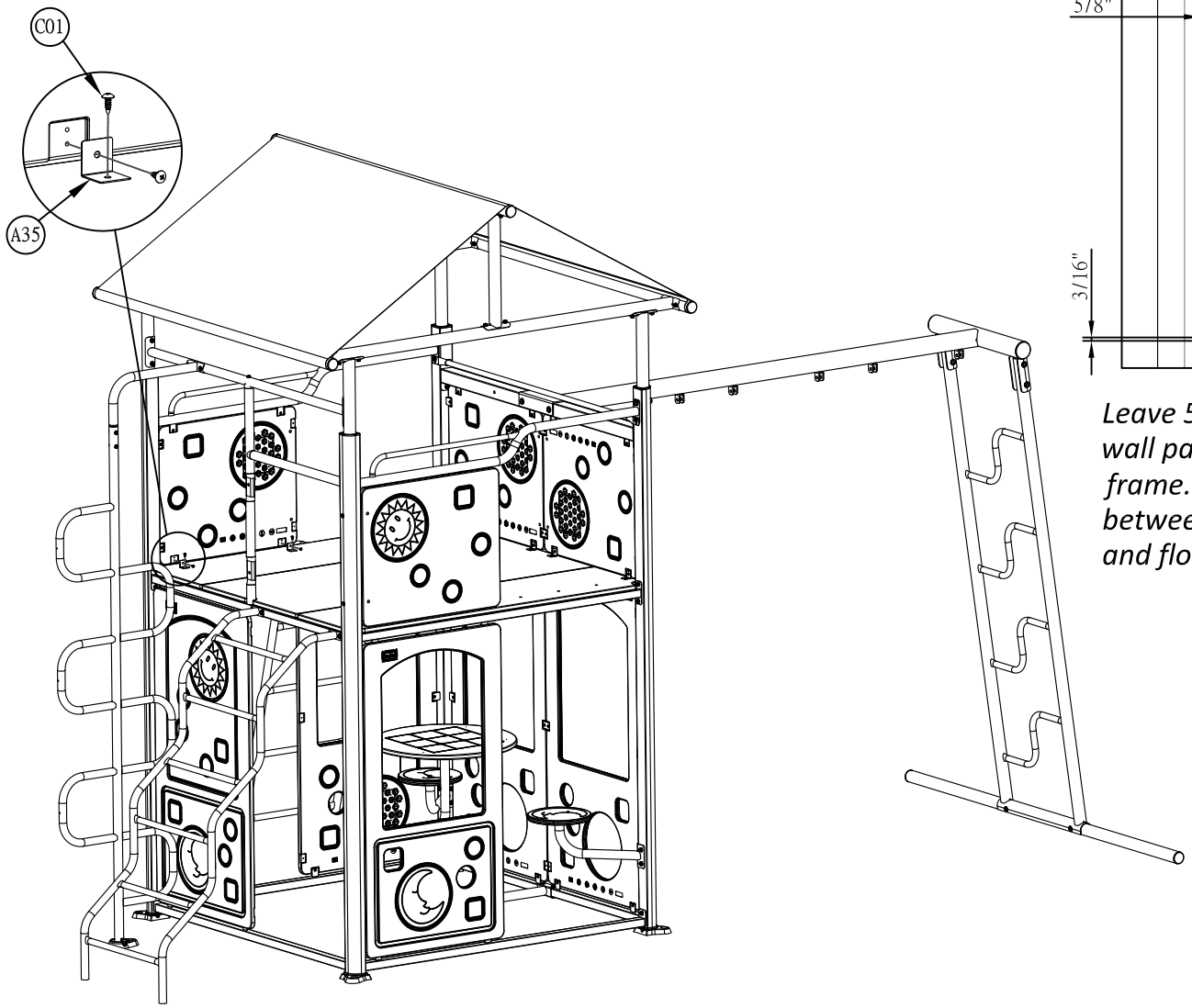

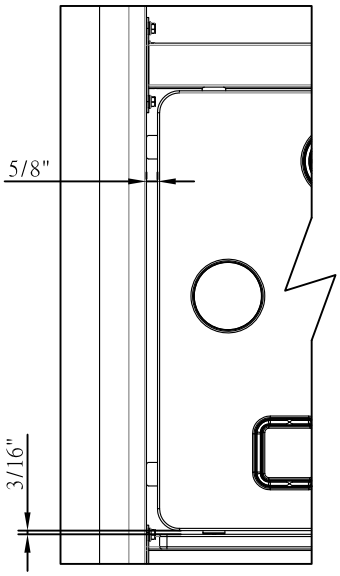

Leave 5/8" between wall panel and metal frame. 3/16" distance between wall panel and floor panel

STEP 20

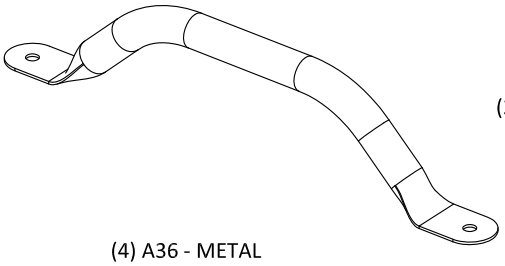

(4) A36 - METAL HANDRAIL - A4M00819

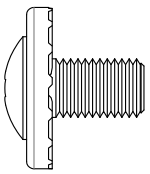

(2) C05 - PAN HEAD TORX NY-LOCK SCREW 5/16x12.7mm - H100599

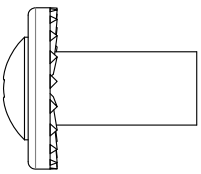

(2) C12 - PAN HEAD TORX NY-LOCK NUT 5/16x19.1mm - H100600

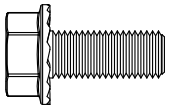

(6) C06 - HEX NY-LOCK SCREW WITH PAD 5/16x20mm - H100596

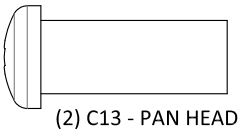

(2) C13 - PAN HEAD TORX NUT 5/16x25.4mm - H100606

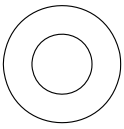

(8) C17 - STEEL WASHER 8.2x16mm - H100608

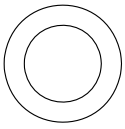

(4) C18 - STEEL WASHER 10.5x16mm - H100607

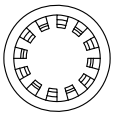

(8) C21 - STAR WASHER 8.4x14.5mm - H100610

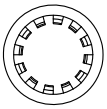

(4) C22 - STAR WASHER 3/8 - H100611

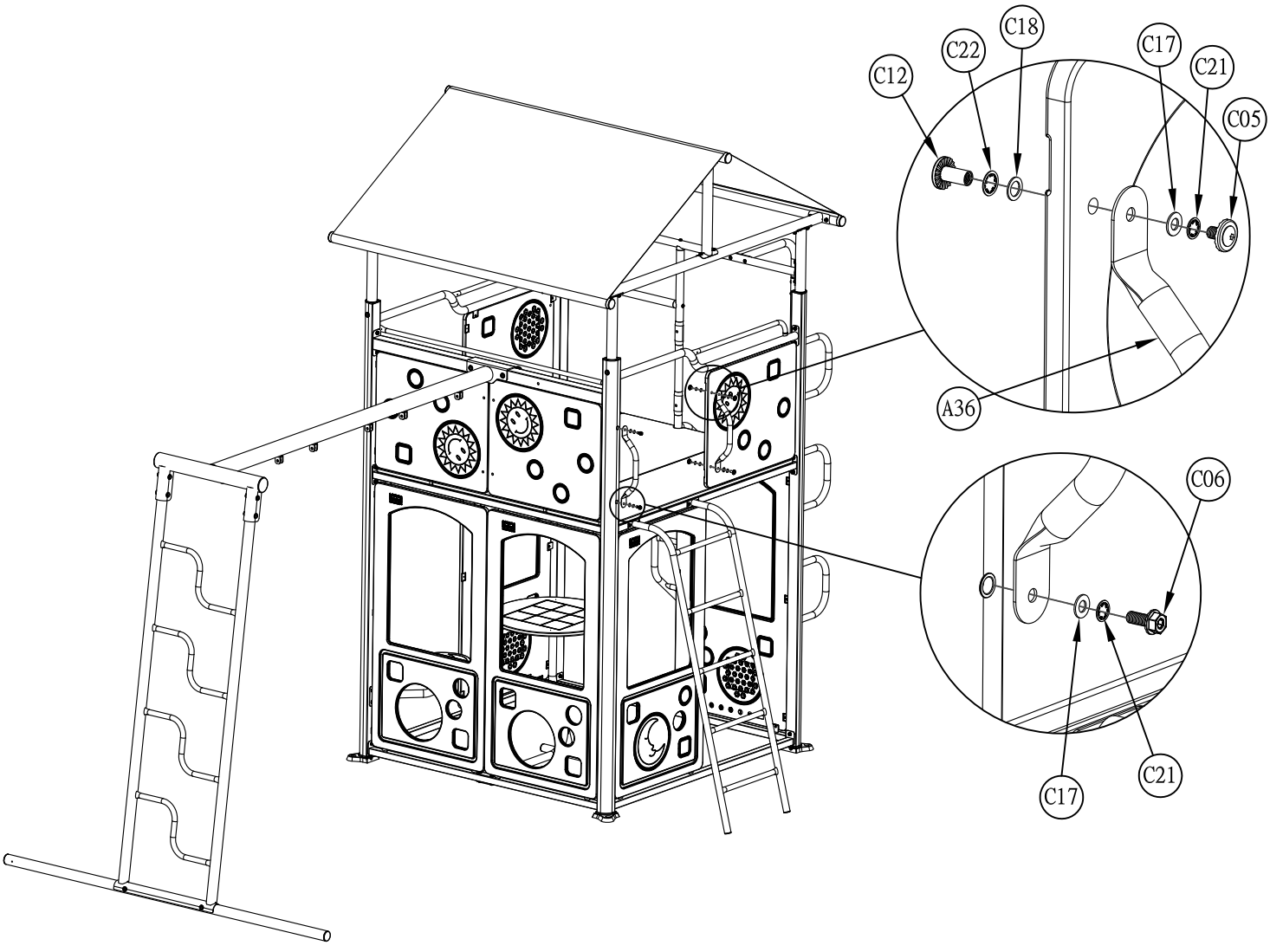

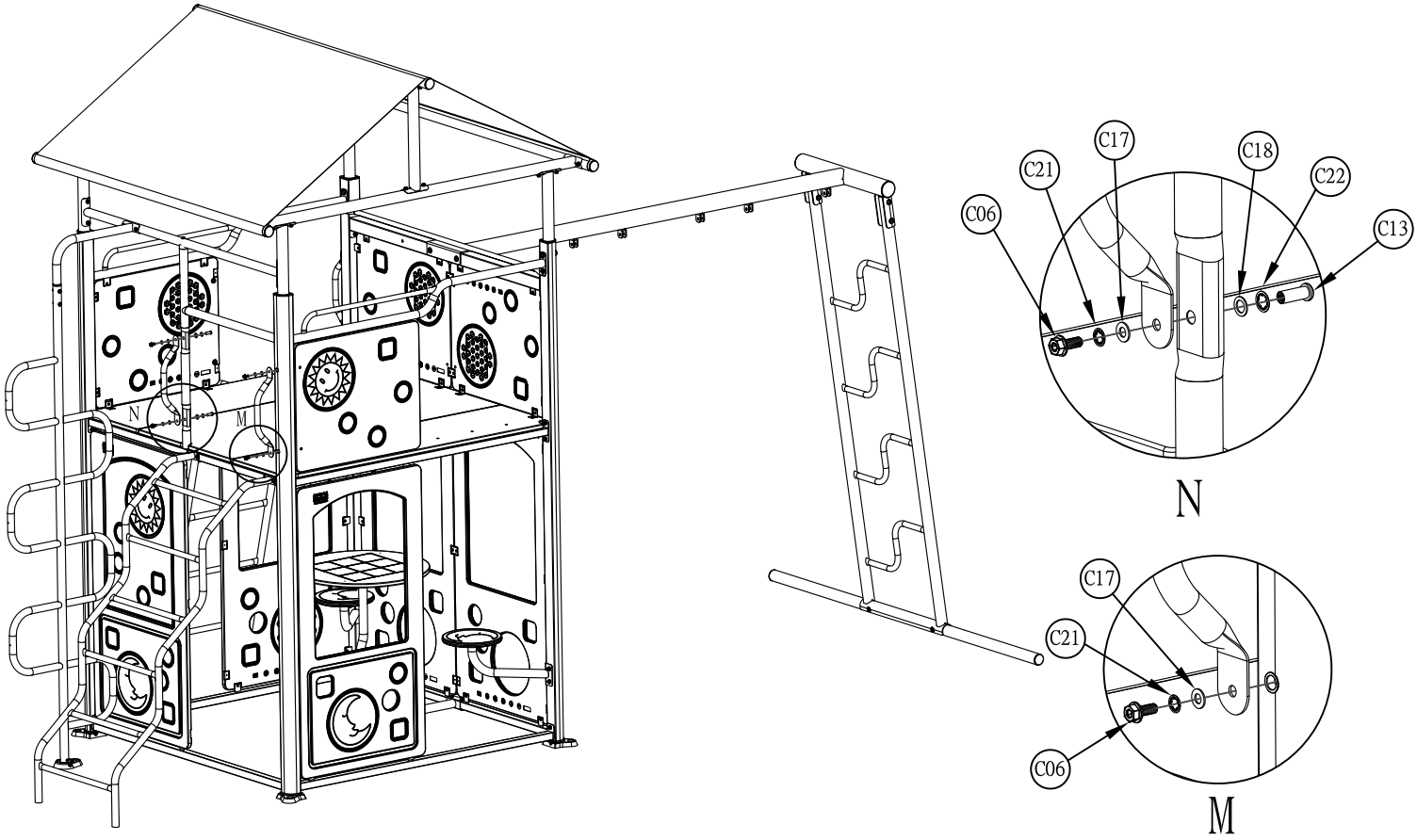

STEP 21

(2) D02 - CHAIN GREEN 31"- A100177

4) D04 - CHAIN GREEN 57"- A100047

(2) D05 - YELLOW SWING SEAT - A100171

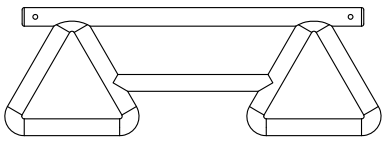

(1) D03 - VALUE TRAPEZE- A6P00034

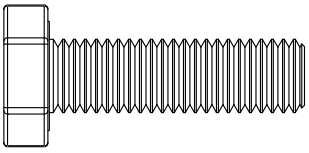

(6) C08 - HEX HEAD SCREW M10x35mm - H100615

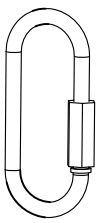

(6) D06 - QUICK LINK - A100069

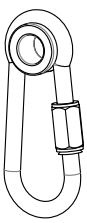

(6) D10 - SWING HANGER LINK - A6P00215

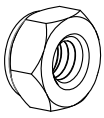

(6) C16 - HEX NUT M10 - H100616

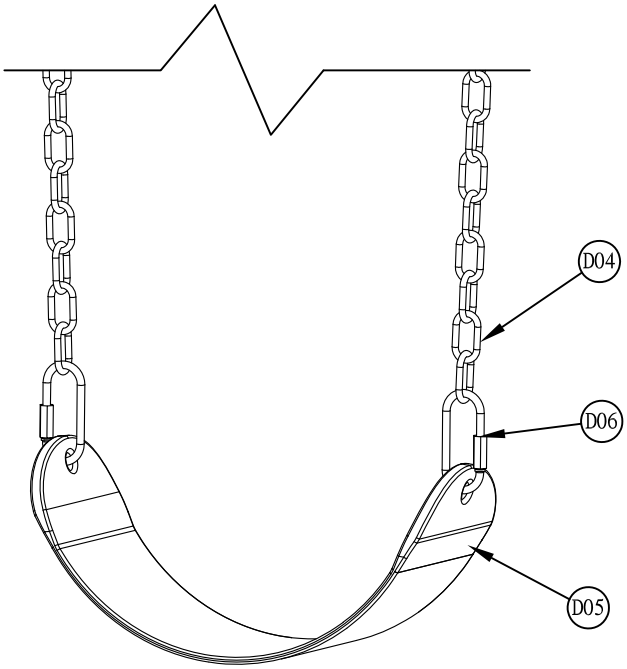
D04
D06
D05

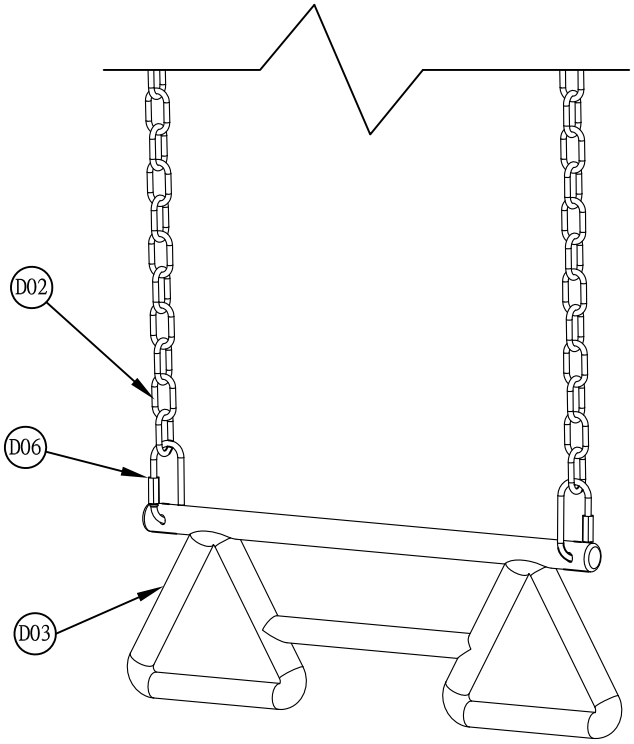
D02
D06
D03

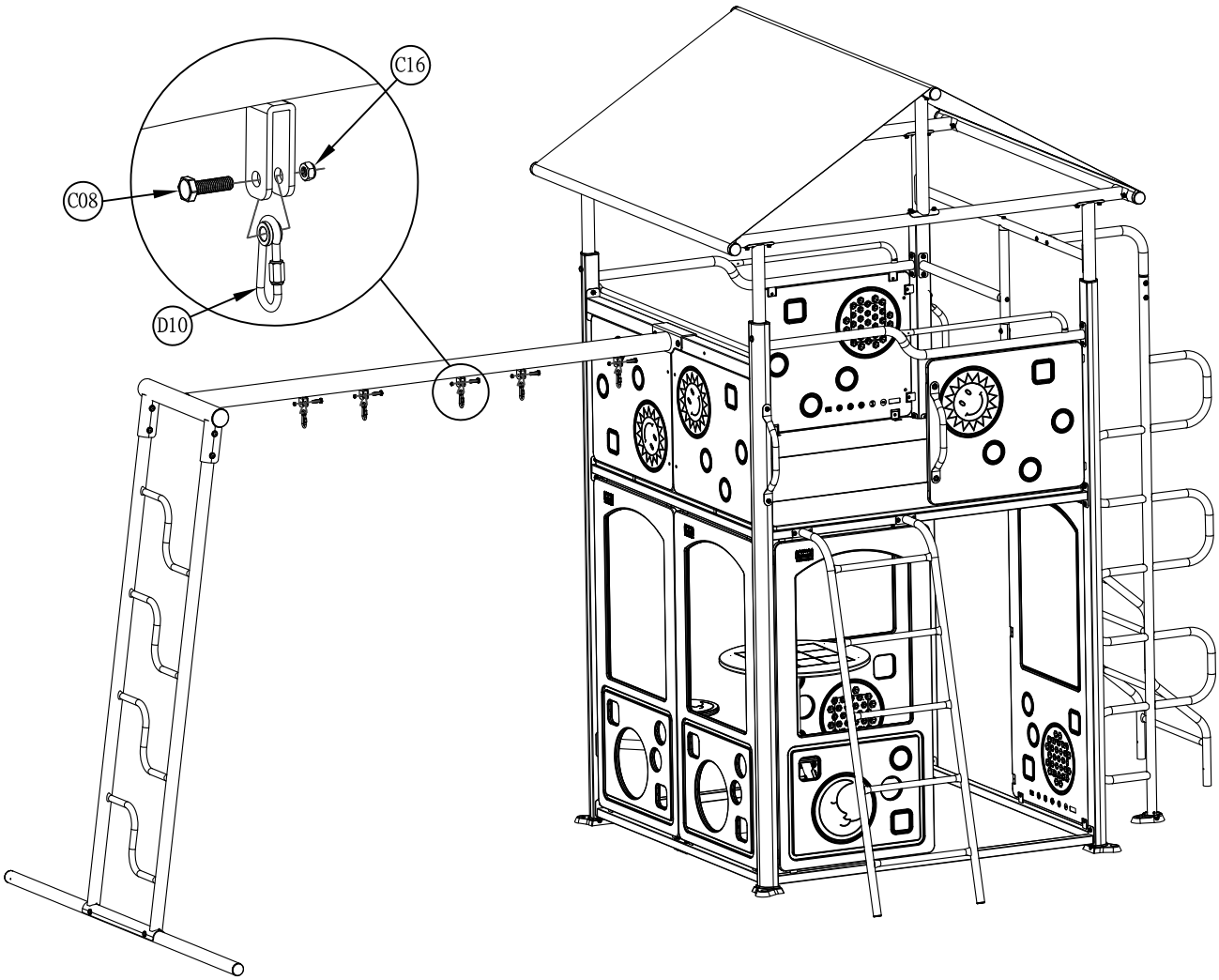
C16
C08
D10

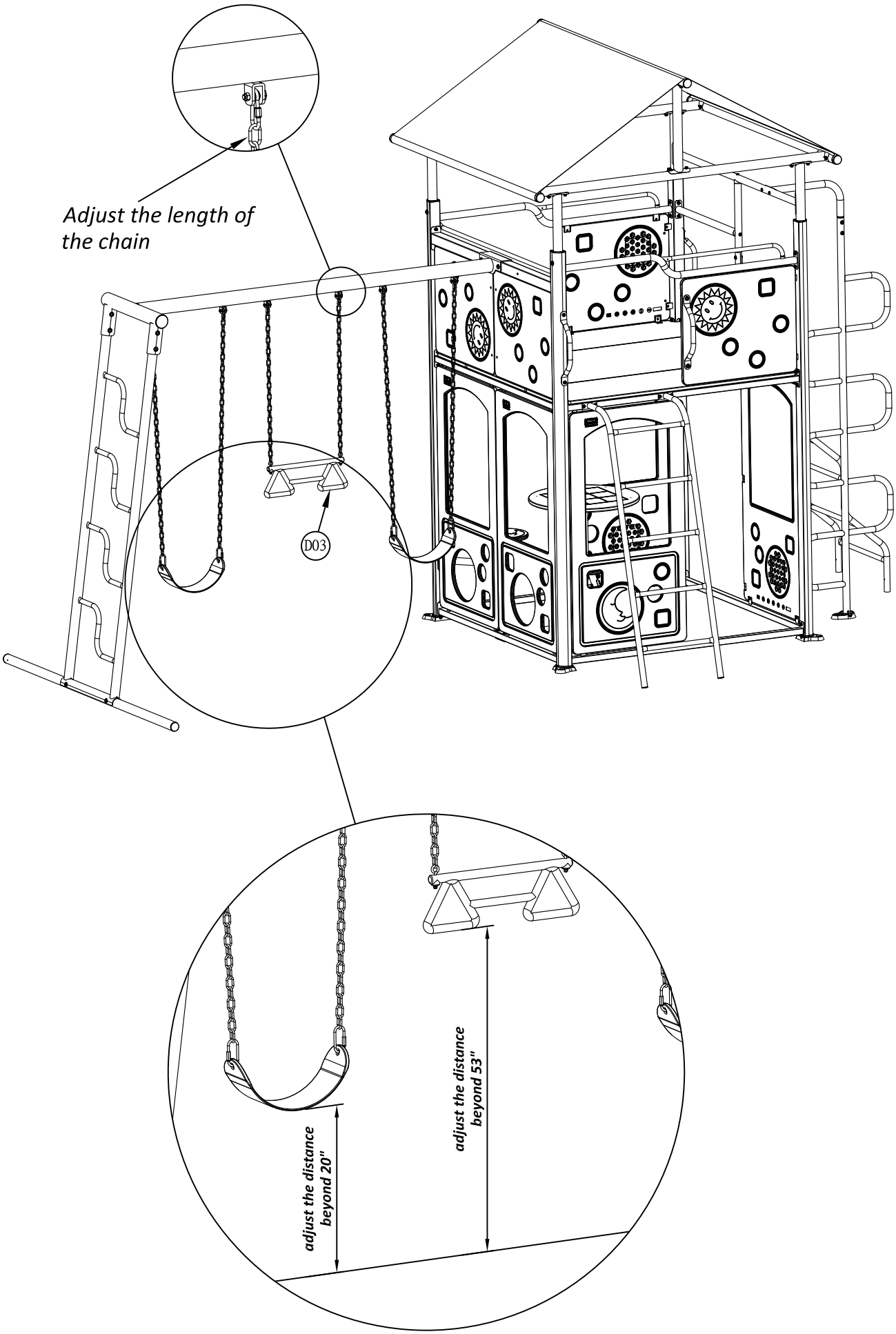
Adjust the length of the chain
D03
adjust the distance beyond 20"
adjust the distance beyond 53"

STEP 22

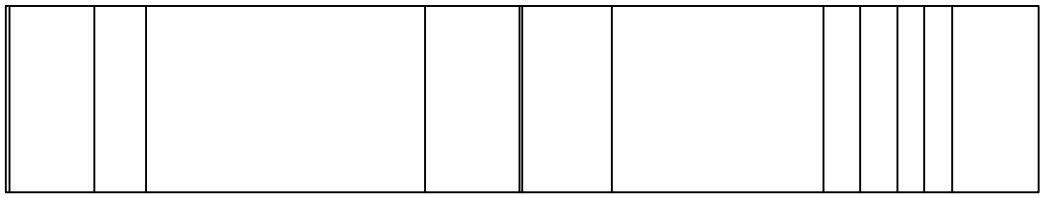

(1) E07 - SLIDE BED 10'
YELLOW - A100197

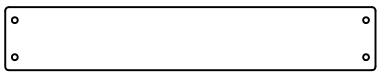

(1) E01 - SLIDE BED SUPPORT - W100935

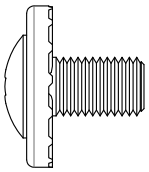

(3) E08 - BOLT WH 5/16x1/2 - H100115

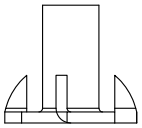

(3) E13 - T-NUT 5/16 - H100074

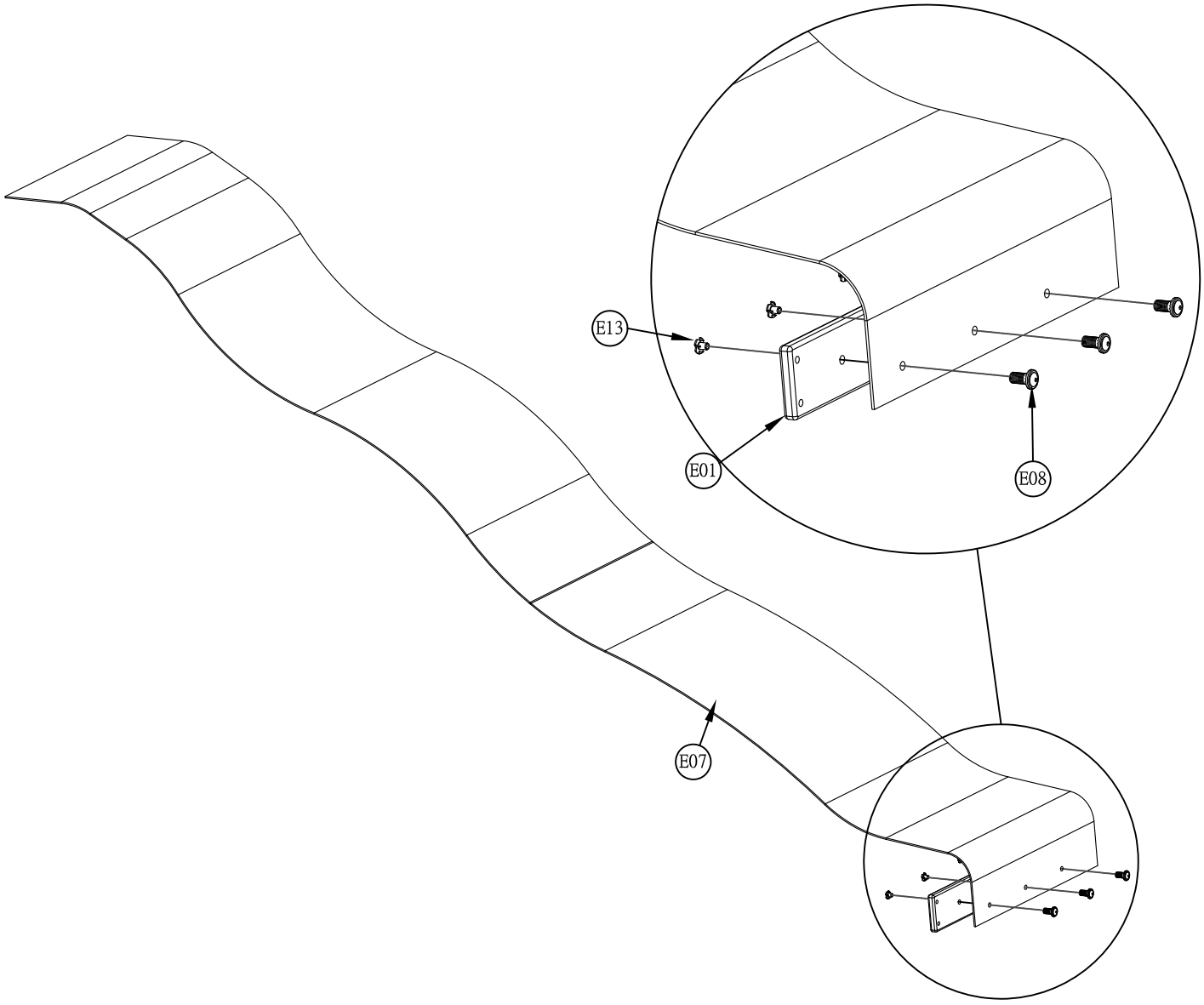

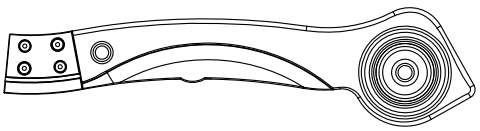

(1) E03 - SLIDE RAIL 10' BOTTOM LEFT GREEN - A100030

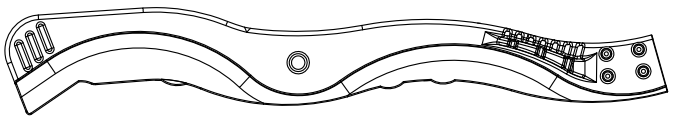

(1) E04 - SLIDE RAIL 10' TOP LEFT GREEN - A100032

(1) E05 - SLIDE RAIL 10' BOTTOM RIGHT GREEN - A100031

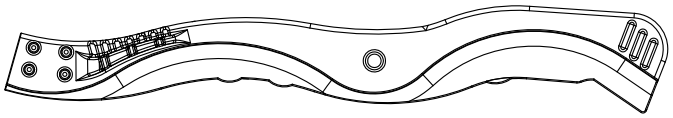

(1) E06 - SLIDE RAIL 10' TOP RIGHT GREEN - A100033

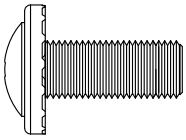

(8) E09 - BOLT WH 5/16x3/4 - H100222

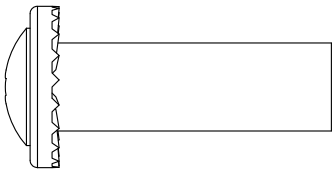

(8) E11 - NUT BARREL WH 5/16x1-1/2 - H100006

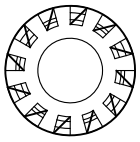

(8) E14 - WASHER LOCK EXT 8x19 - H100030

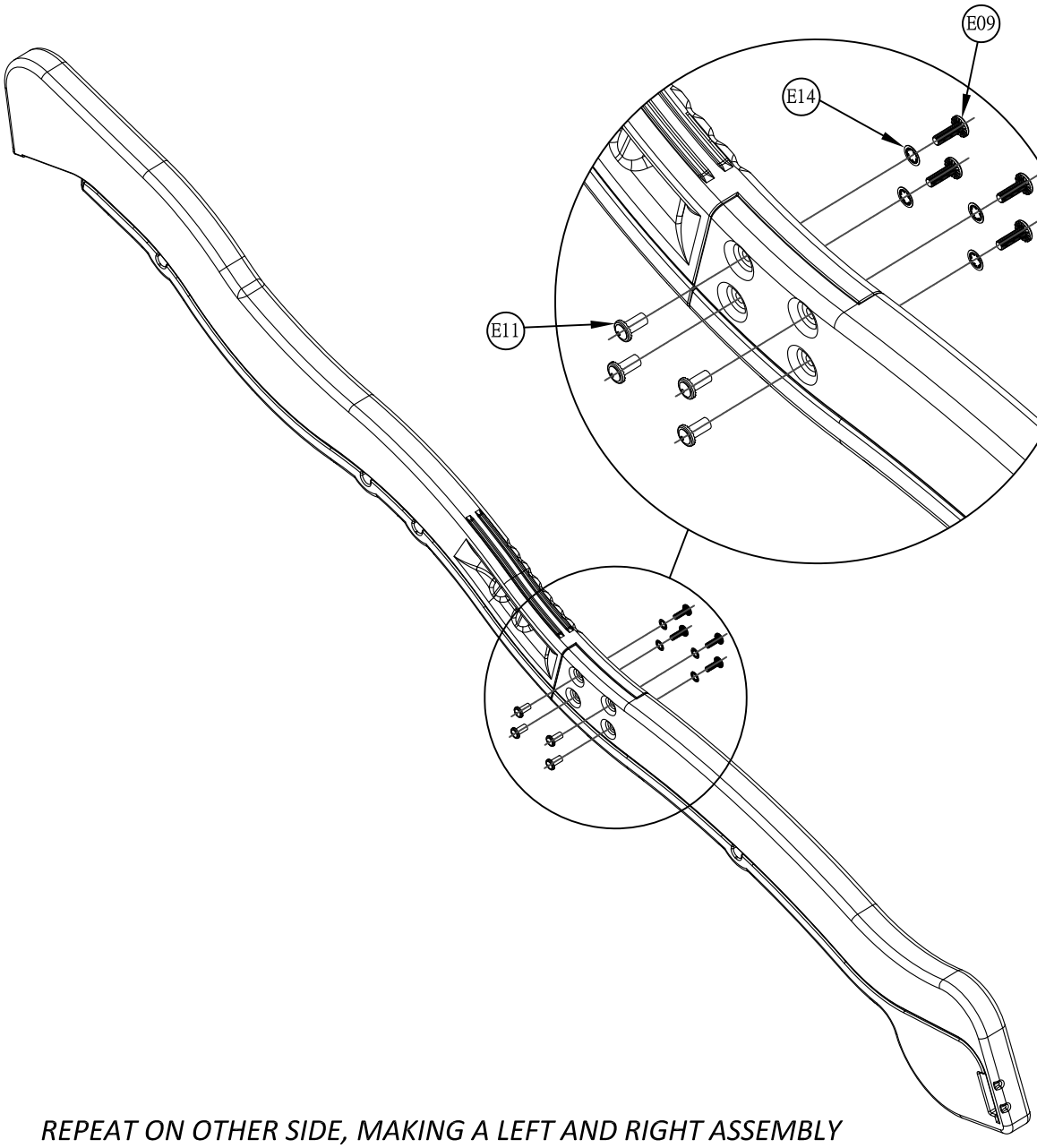

REPEAT ON OTHER SIDE, MAKING A LEFT AND RIGHT ASSEMBLY

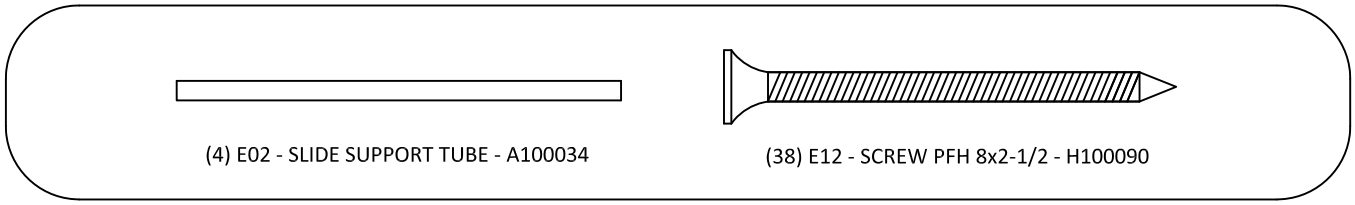

(4) E02 - SLIDE SUPPORT TUBE - A100034

(38) E12 - SCREW PFH 8x2-1/2 - H100090

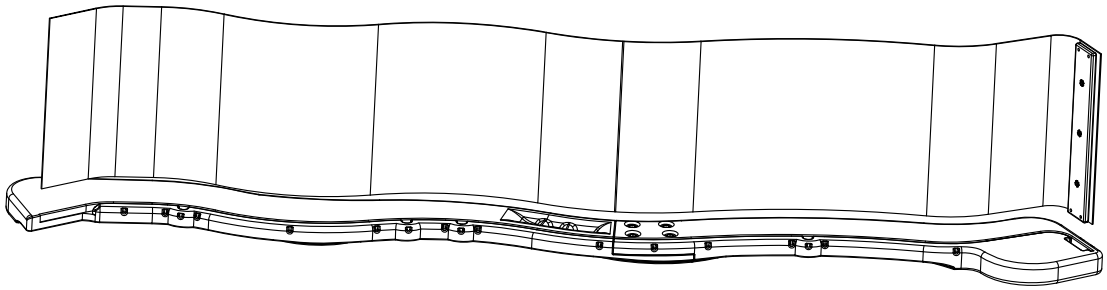

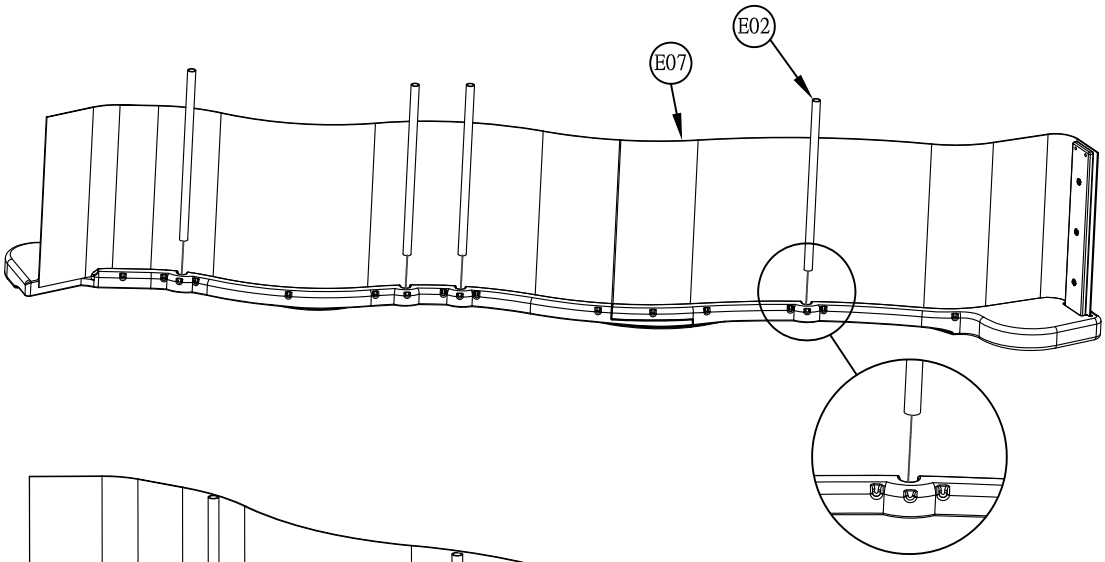

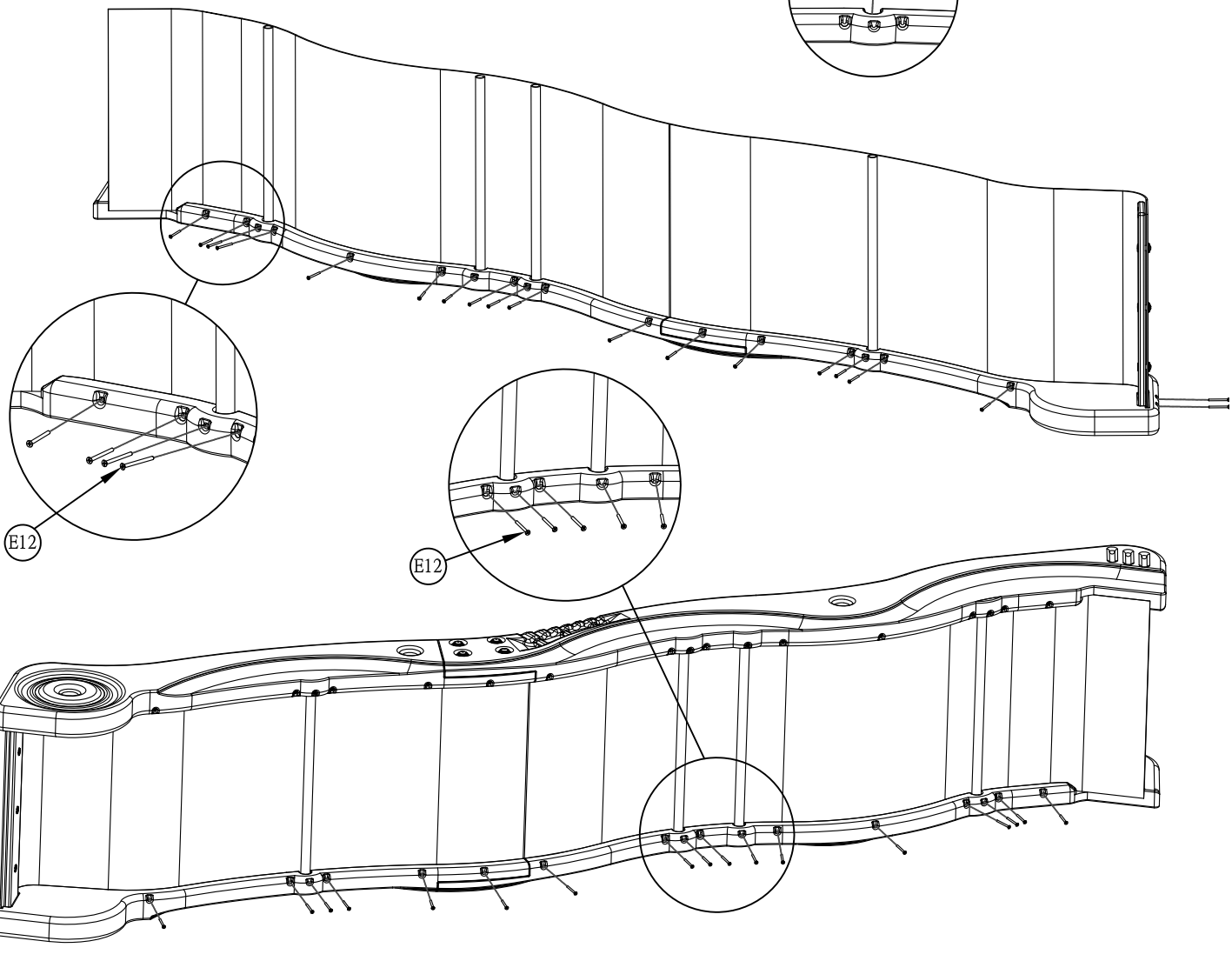

STEP 23

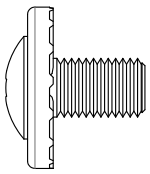

(3) E08 - BOLT WH 5/16x1/2 - H100115

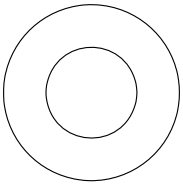

(6) C19 - STEEL WASHER
12.4x24mm - H100609

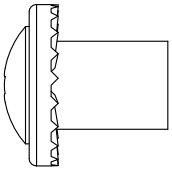

(3) E10 - NUT BARREL WH
5/16x5/8 - H100004

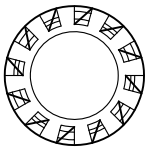

(3) E15 - WASHER LOCK
EXT 12x19 - H100031

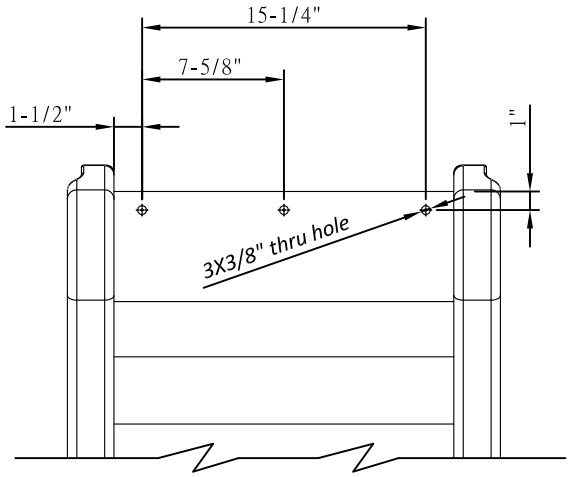

drill three holes to 3/8"

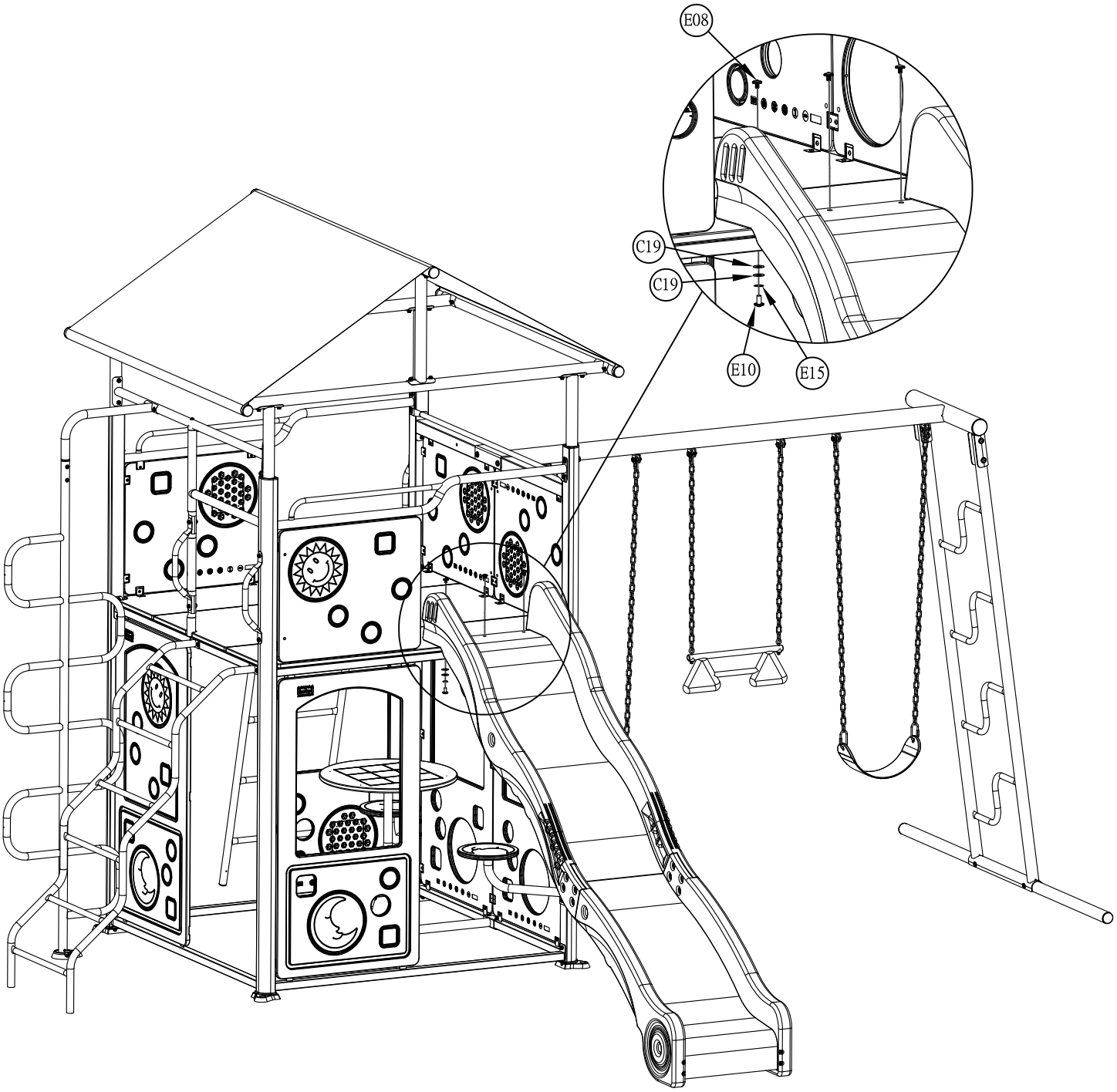

STEP 24

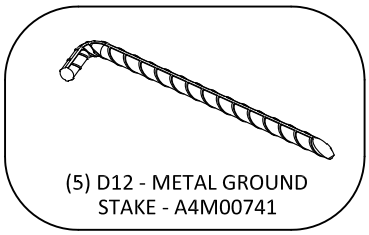

(5) D12 - METAL GROUND STAKE - A4M00741

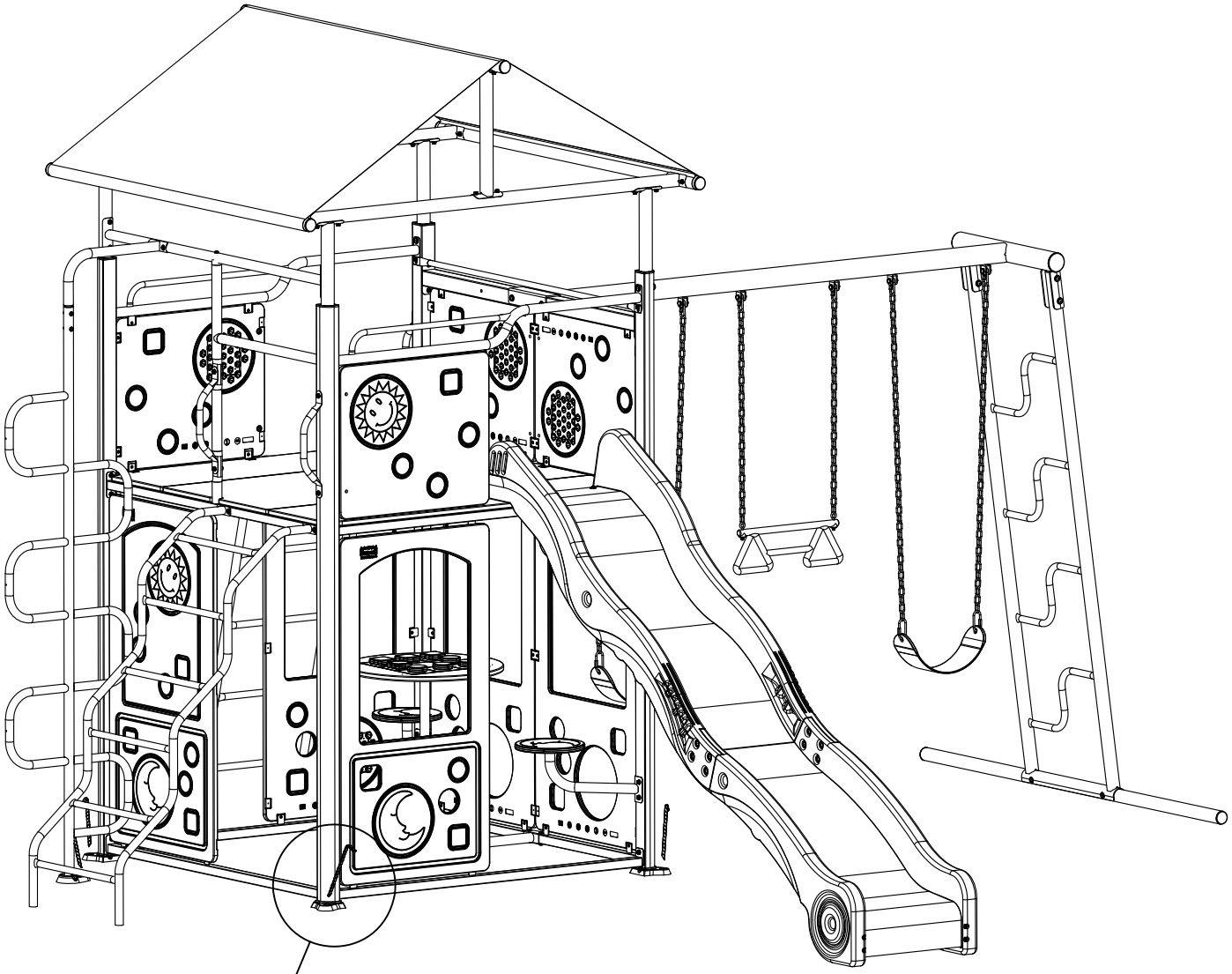

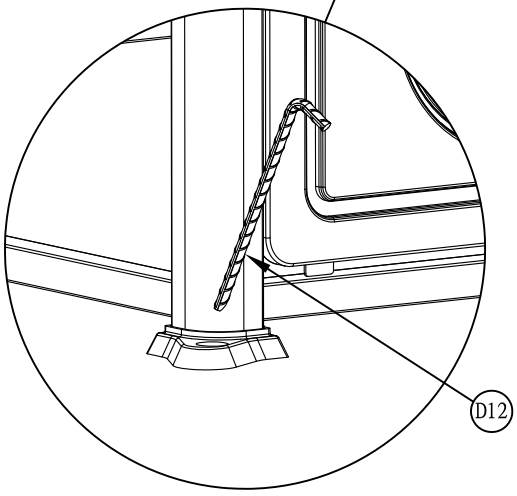

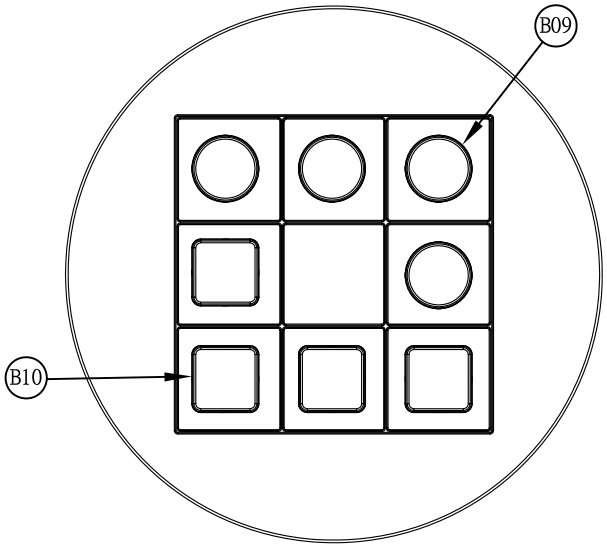

Tic Tac Toe game pieces included

STEP 25

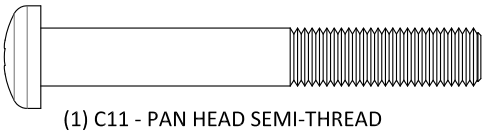

(1) C11 - PAN HEAD SEMI-THREAD SCREW 5/16x60mm - H100601

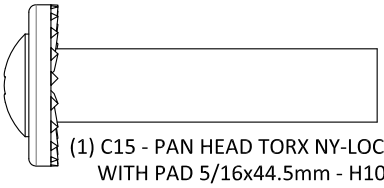

(1) C15 - PAN HEAD TORX NY-LOCK NUT WITH PAD 5/16x44.5mm - H100620

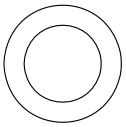

(1) C18 - STEEL WASHER 10.5x16mm - H100607

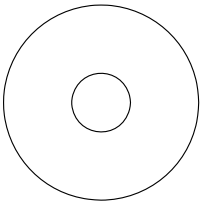

(1) C20 - STEEL WASHER 8.0X26.6mm - H100619

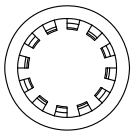

(1) C22 - STAR WASHER 3/8 - H100611

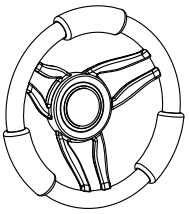

(1) D07 - STEERING WHEEL - A100105

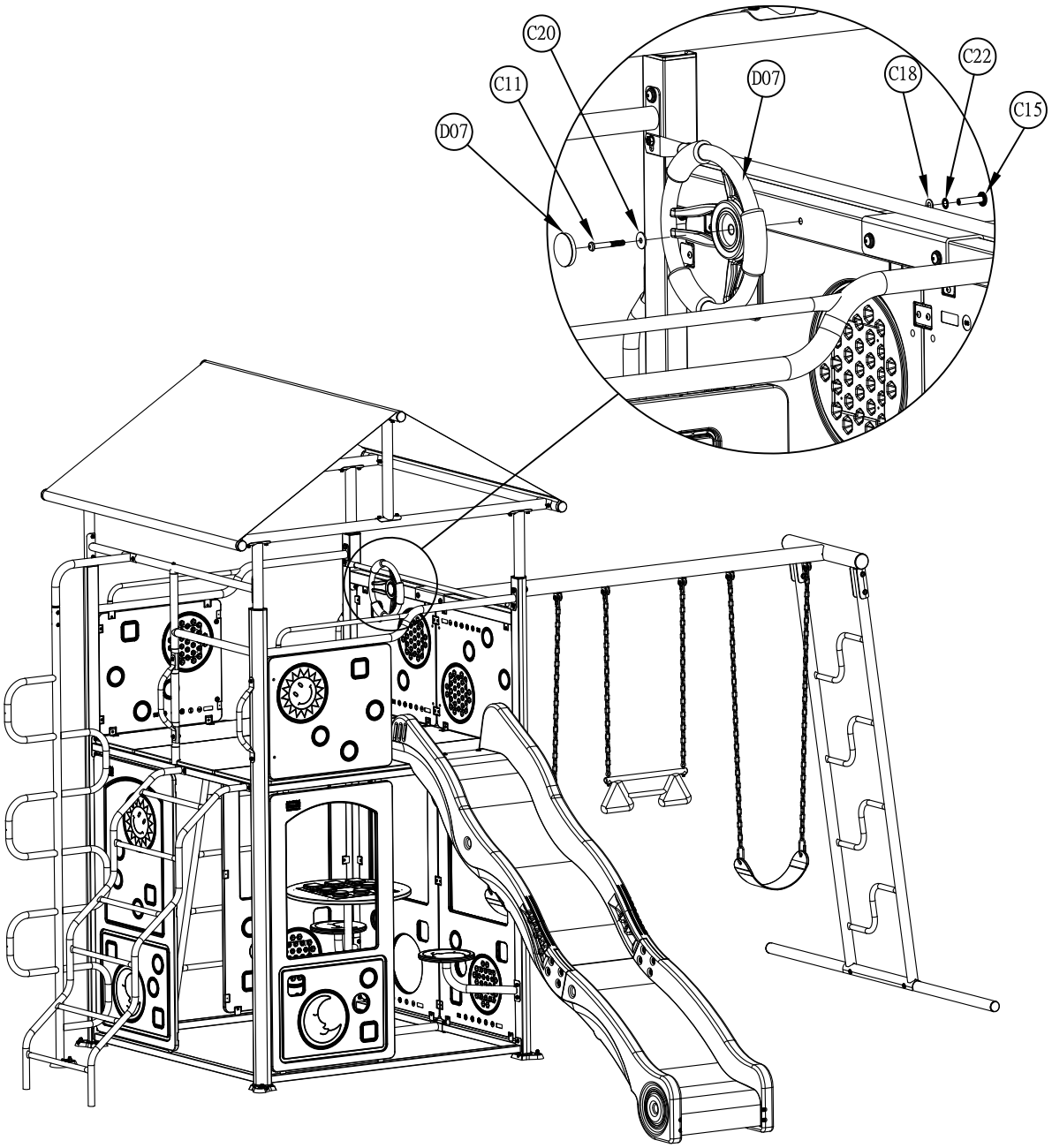

Anchoring Instructions

TAP IN GROUND STAKES AT AN APPROXIMATE 45° ANGLE AT THE LOCATIONS SHOWN.

NOTE:
FAILURE TO USE GROUND STAKES CAN VOID WARRANTY & CAUSE INJURY!

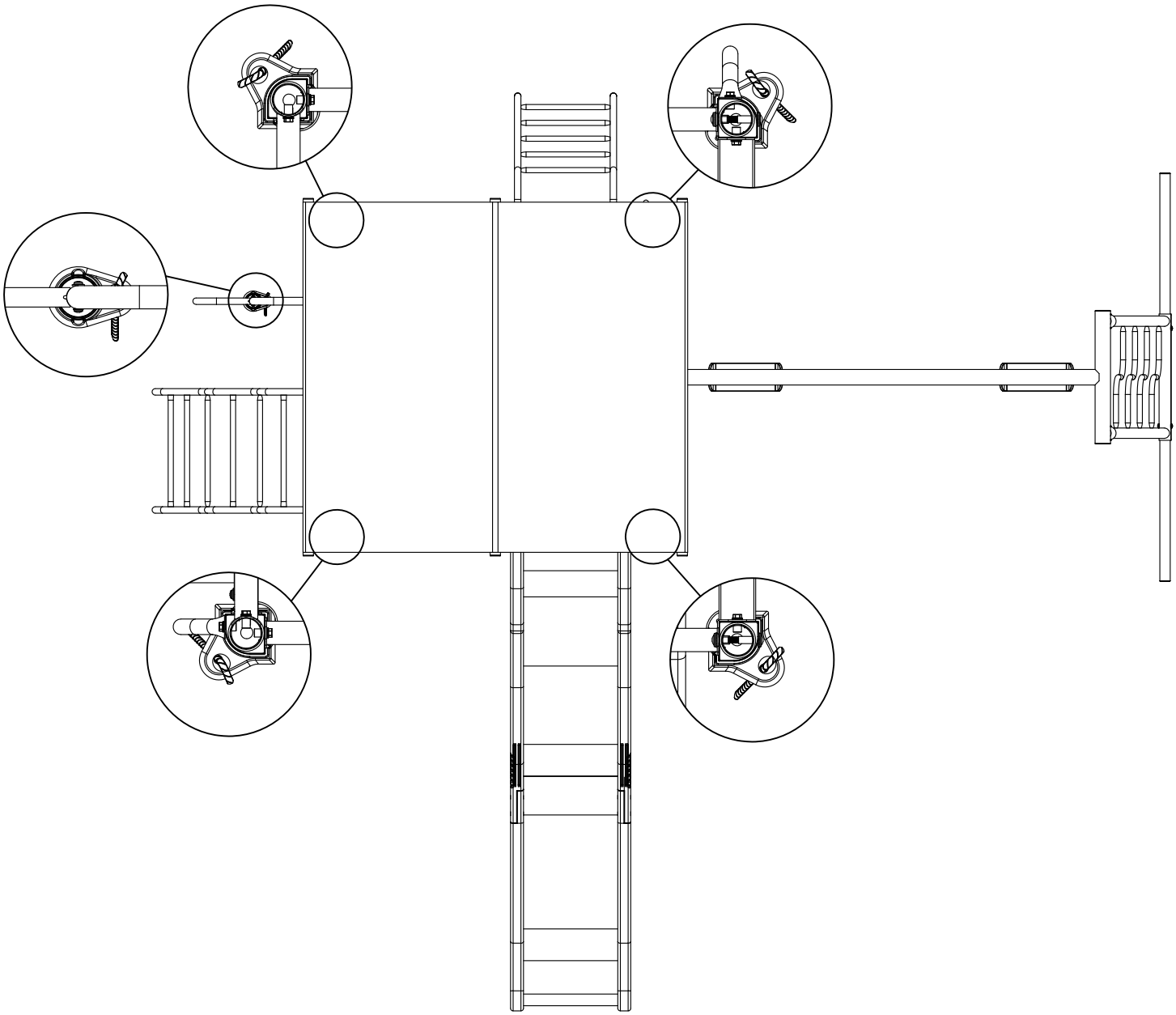

FINAL STEP

DOUBLE CHECK EVERY BOLT, SCREW AND NUT FOR TIGHTNESS. MAKE SURE EVERY BOARD IS SECURE AND MAKE SURE THE PLAY SET IS LEVEL.

ENJOY YOUR NEW PLAY SET!

Backyard Discovery Metal Swing Set
5 Year Limited Warranty

This Limited Warranty by Backyard Discovery applies to Products manufactured under the Backyard Discovery brand. The Manufacturer reserves the right to make substitutions to warranty claims if the parts are unavailable or obsolete.

1. This Backyard Discovery Swing Set is warranted to the original purchaser to be free from defects in material and workmanship for a period of five years from the date of original retail purchase. The word "Defects" is defined as imperfections that impair the use of the product. Defects resulting from misuse, abuse or negligence will void this warranty. This warranty does not cover defects due to improper installation, alteration or accident. This warranty does not cover damage caused by vandalism, rusting, "Acts of Nature" or any other event beyond the control of the manufacturer.

2. This warranty is nontransferable and is expressly limited to the repair or replacement of the defective swing set equipment. If the equipment is defective within the terms of this warranty, Backyard Discovery will repair or replace defective parts at no cost to the purchaser. Shipping charges to and from the factory are not covered and are the responsibility of the purchaser. Labor charges and related expenses for removal, installation or replacement of the swing set or its components are not covered under this warranty.

3. This warranty does not cover scratching of scuffing of the product that may result from normal usage. In addition, defects resulting from intentional damage, negligence or unreasonable use will void this warranty.

4. Liability for incidental or consequential damages is excluded to the extent permitted by law. While every attempt is made to embody the highest degree of safety in all equipment, freedom from injury cannot be guaranteed. The user assumes all risk of injury resulting from the use of this product. All merchandise is sold on this condition, and no representative of the company may waive or change this policy.

5. This product is not intended for institutional or commercial use. Backyard Discovery does not assume any liability for such use. Institutional or commercial use will void the warranty.

6. This warranty is expressly in lieu of all other warranties, expressed or implied, including warranties of merchantability or fitness for use to the extent permitted by Federal and State law. Neither Backyard Discovery nor any representative assumes any other liability in connection with this product. This warranty gives you specific legal rights, and you may also have other rights which vary from state to state.

7. This warranty is only valid in the United States.

All Warranty Claims must be accompanied by a sales receipt.
Report product defects in writing to:
Backyard Discovery, Inc. 3305 Airport Drive Pittsburg, Kansas 66762 or call 1-800-856-4445.
Please include your dated sales receipt and photographs of damaged parts.

Save this owner's manual for future reference and in the event that the manufacturer has to be contacted.

To register the product, visit our website at www.backyarddiscovery.com