PACIFIC VIEW
WOODEN PLAYSET
MODEL: #30015

Backyard Discovery
3305 Airport Drive
Pittsburg, KS 66762
1-800-856-4445

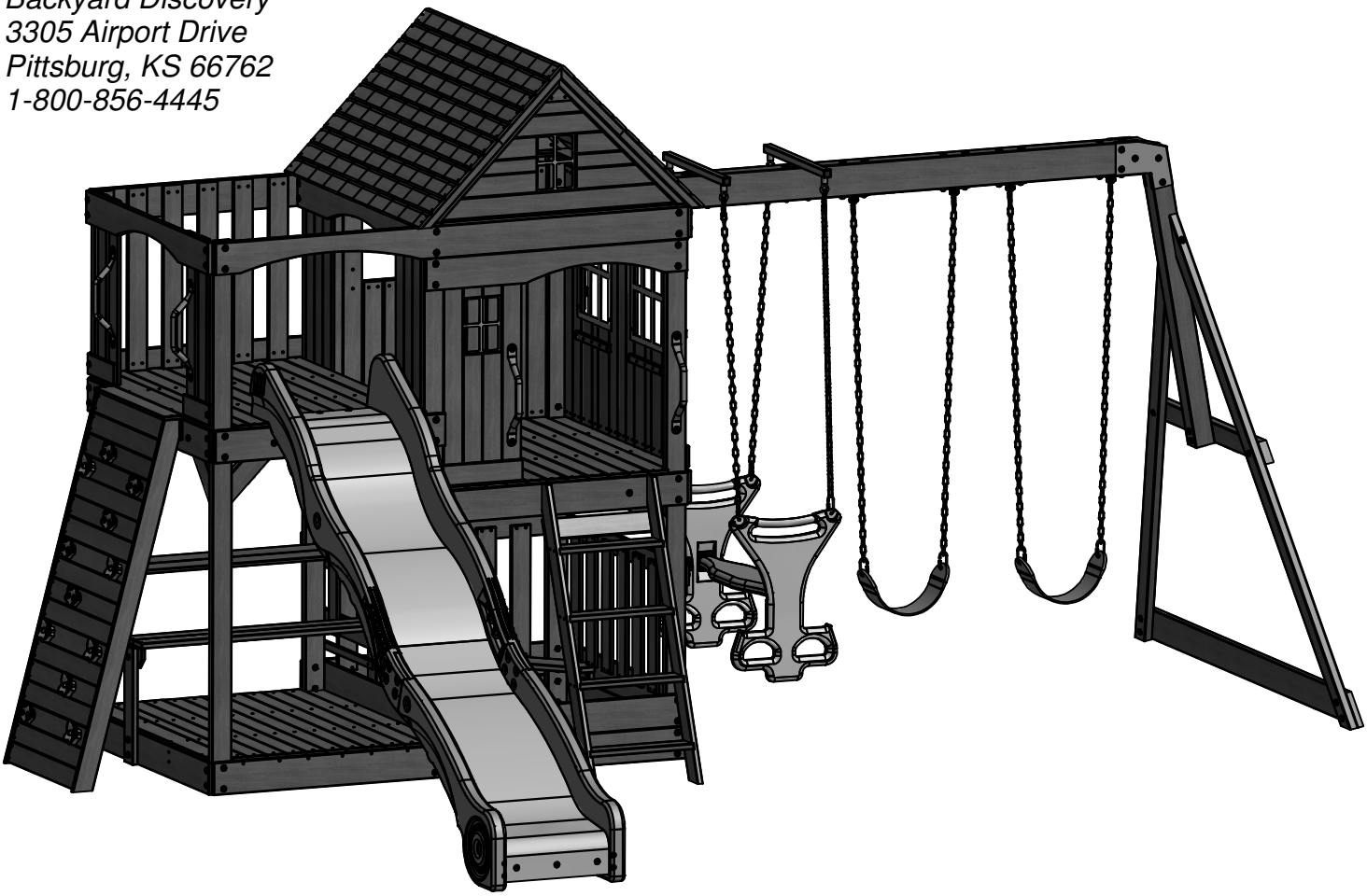

- *Owner's Manual*
- *Frequently Asked Questions*
- *Assembly Instructions*
- *Warranty Information*

Register your new swing set on-line @ www.swingsetsonline.com
(you will also find any updates on assembly instructions and information to order replacement parts)

Features the SAFE-T-FUSE *fastening system.*

Save this assembly manual for future reference in the event that you need to order replacement parts.

INS-30015-A-PACIFIC VIEW-ENG 10/20/14

Made in China

STOP
PARE

Missing A Part?
CALL US BEFORE GOING
BACK TO THE STORE!
The store where you made your purchase
does not stock parts for this item.
If you have assembly questions or if you need parts,
whether they are missing or damaged
Call Toll-Free Help Line or visit www.swingsetsonline.com

¡LLÁMENOS ANTES DE REGRESAR A LA TIENDA!
La tienda donde realizó la compra no almacena piezas de este producto.
Si tiene preguntas sobre el ensamblaje o si necesita piezas debido a que
faltan o están dañadas
llame gratis a la línea de ayuda

1-800-856-4445

PLEASE READ THIS BEFORE STARTING ASSEMBLY
POR FAVOR LEA ESTAS INSTRUCCIONES ANTES DE COMENZAR EL ENSAMBLAJE

- READ THE ASSEMBLY MANUAL COMPLETELY, PAYING SPECIAL ATTENTION TO THE IMPORTANT TIPS AND SAFETY INFORMATION.
- AFTER YOU HAVE READ THE ASSEMBLY MANUAL, YOU WILL BE ABLE TO DECIDE IF YOU NEED PROFESSIONAL HELP TO COMPLETE THE ASSEMBLY OF THE STRUCTURE.
- SEPARATE AND IDENTIFY ALL PARTS TO MAKE SURE THAT YOU HAVE ALL OF THE PARTS LISTED.
- IF YOU CAN'T FIND ALL OF THE PARTS, CHECK THE PACKING MATERIAL. SMALL PARTS MAY HAVE FALLEN INTO IT DURING SHIPMENT.
- IF YOU HAVE PROBLEMS WITH THE ASSEMBLY OR IF ANY PART IS MISSING OR DAMAGED, PLEASE CALL THE HELP LINE **1-800-856-4445 OR VISIT www.swingsetsonline.com**

- LEA EL MANUAL DE ENSAMBLAJE COMPLETAMENTE, PRESTANDO ESPECIAL ATENCIÓN A LOS CONSEJOS ÚTILES IMPORTANTES Y A LA INFORMACIÓN SOBRE SEGURIDAD.
- DESPUÉS DE QUE HAYA LEÍDO EL MANUAL DE ENSAMBLAJE, PODRÁ DECIDIR SI NECESITA AYUDA PROFESIONAL PARA EFECTUAR EL ENSAMBLAJE DE LA ESTRUCTURA.
- SEPARE E IDENTIFIQUE TODAS LAS PIEZAS PARA COMPROBAR QUE DISPONE DE TODAS LAS PARTES INDICADAS.
- SI NO PUEDE ENCONTRAR TODAS LAS PIEZAS, REVISE EL MATERIAL DE EMPAQUE. ES POSIBLE QUE ALGUNAS PIEZAS PEQUEÑAS PUEDAN HABERSE CAÍDO ALLÍ DURANTE EL ENVÍO.
- MANTÉNGASE ALEJADO DE LOS NIÑOS MENORES A LA EDAD RECOMENDADA.
- SI TIENE PROBLEMAS CON EL ENSAMBLAJE O SI ALGUNA PIEZA FALTA O ESTÁ DAÑADA, LLAME A LA LÍNEA DE AYUDA AL **1-800-856-4445 O VISITE www.swingsetsonline.com**

PLEASE HAVE THE FOLLOWING INFORMATION WHEN YOU MAKE YOUR CALL:

1 – MODEL NUMBER OF THE PRODUCT LOCATED ON THE FRONT OF THE ASSEMBLY MANUAL
2 – DESRIPTION OF THE PART FROM THE PARTS LIST

POR FAVOR TENGA VISIBLE LA SIGUIENTE INFORMACIÓN CUANDO LLAME:

1 - NÚMERO DE MODELO DEL PRODUCTO QUE SE ENCUENTRA UBICADO AL FRENTE DEL MANUAL DE ENSAMBLAJE
2 - DESCRIPCIÓN DE LA PIEZA QUE SE ENCUENTRA EN LA LISTA DE PIEZAS

Dear Customer:
Please read entire booklet completely before beginning the assembly process.

Equipment is recommended for use by ***children 3 to 10 years of age****. Structures are* ***not intended for public use. The Company does not warranty any of its residential structures subjected to commercial use such as: Daycare, Preschool, Nursery School, Recreational Park, or any similar Commercial Application.***

WARNING*: This Symbol points out important safety instructions which, if not followed, could endanger the personal safety of yourself and your children and/or damage your property. You MUST read and follow all instructions in this manual before attempting to use this playcenter.*

WARNING*:* ***Children must NOT use this playcenter until unit has been completely assembled and inspected by an adult to insure set has been properly installed and anchored.***

Please follow all recommendations below. ***Failure to do so may result in the warranty being void and/or safety violations that could result in serious injury****. This manual contains helpful information concerning Assembly Preparation, Installation Procedure, and Required Maintenance. Always keep the safety of your children in mind as your play structure is being built and as your children play on the set. Before your children play on the set please review the Operation Instructions with them to help ensure their safety.*

PLEASE RETAIN THESE INSTRUCTIONS FOR FUTURE REFERENCE. KEEP THEM IN A SAFE PLACE WHERE YOU CAN REFER TO THEM AS NEEDED. IN ORDER TO PROVIDE YOU WITH THE MOST EFFICIENT SERVICE, IT IS REQUIRED THAT YOU PROVIDE US WITH THE PART NUMBERS WHEN ORDERING PARTS.

For Your Records:
Please take time and fill out the information below. This information will be needed for warranty issues.
Where Purchased: _____
Date of Purchase: _____
Installation Date: _____
Installed by: _____
Tracking Number: _____

Staple Receipt Here

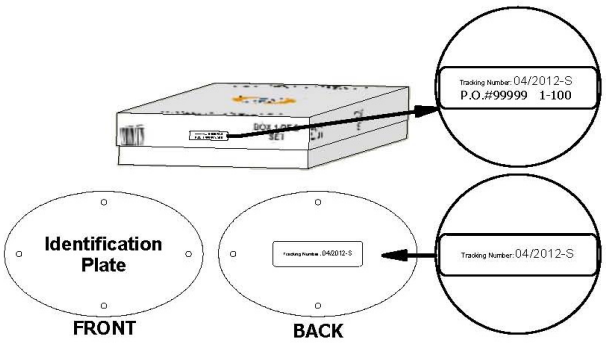

OR

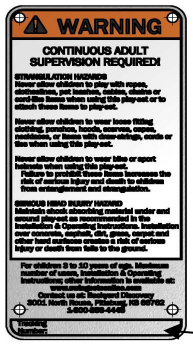

Tracking Number

Vertical ID Plate

Tracking Number Reference Label
Tracking ID number on the carton and back of the ID plate or vertical ID plate are included for tracking purposes associated with warranty claims.

Please refer to the Assembly section of the Assembly Manual for Maximum Fall Height.

Positioning Your Playcenter

1. *The Playcenter is designed to be installed on a level surface* ***by an Adult with an Adult helper****. Place in a flat area of your yard to minimize ground preparation.*
2. *Choose a level location for the equipment. This can reduce the likelihood of the play set tipping over and loose-fill surfacing material washing away during heavy rains.*
3. *Place the equipment not less than* ***6 ft (1.8 m)*** *from any structure or obstruction such as a fence, garage, house, overhanging branches, laundry lines, or electrical wires.*
4. *Provide enough room so that the children can use the equipment safely. For example, for structures with multiple play activities, a slide should not exit in front of a swing.*
5. *It is a good idea to place your Playcenter in an area that is convenient for adults to watch children at play.*
6. *Create a site free of obstacles that could cause injuries – such as low overhanging tree branches, overhead wires, tree stumps and/or roots, large rocks, bricks and concrete. Additional suggestions in the Suggested Playground Surfacing Section.*
7. *Do not build your playset on top of surfacing material.*
8. *Locate bare metal platforms and slides out of direct sunlight to reduce the likelihood of serious burns. A slide that faces north will receive the least direct sunlight.*
9. *Separate active and quiet activities from each other. For example, locate sandboxes away from swings or use a guardrail or barrier to separate the sandbox from the movement of the swings.*

Suggested Playground Surfacing

- *Do not install home playground equipment over concrete, asphalt, packed earth, grass, carpet, or any other hard surface. A fall onto a hard surface can result in serious injury to the equipment user.*
- *Do not install loose fill surfacing over hard surfaces such as concrete or asphalt.*
- *Shredded bark mulch, wood chips, fine sand and fine gravel, are added as shock absorbing materials after assembly. If used properly these materials can absorb some of the impact of a child's fall.*
- *All surface material should extend a minimum of 6 feet in all directions around the play area.*
- *Do not apply playground surfacing until after the unit is completely constructed. Playset should not be built on top of surfacing.*
- *Use containment, such as digging out around the perimeter and/or lining the perimeter with landscape edging.*
- *Installations of rubber tiles or poured-in-place surfaces (other than loose-fill materials) generally require a professional and are not "do-it-yourself" projects.*
- *Shall use Playground Surfacing Materials (other than loose-fill material) which comply with the safety standard ASTM F1292 Standard Specification of Impact Attenuation of Surfacing Materials within the Use Zone of Playground Equipment.*

The following chart explains the fall height in feet from which a life threatening head injury would not be expected

Critical Heights in feet (m) of Tested Materials

Material	Uncompressed Depth			Compressed Depth
	6" (152mm)	9" (228mm)	12" (304mm)	to 9" (228mm)
Wood Chips	7' (2.13m)	10' (3.05m)	11' (3.35m)	10' (3.05m)
Double-Shredded bark mulch	6' (1.83m)	10' (3.05m)	11' (3.35m)	7' (2.13m)
Engineered Wood Fibers	6' (1.83m)	7' (2.13m)	>12' (3.66m)	6' (1.83m)
Fine Sand	5' (1.52m)	5' (1.52m)	9' (2.74m)	5' (1.52m)
Coarse Sand	5' (1.52m)	5' (1.52m)	6' (1.83m)	4' (1.22m)
Fine Gravel	5' (1.52m)	7' (2.13m)	10' (3.05m)	6' (1.83m)
Medium Gravel	5' (1.52m)	5' (1.52m)	6' (1.83m)	5' (1.52m)
Shredded Tires*	10-12' (3.0-3.6m)	N/A	N/A	N/A

*This data is from tests conducted by independent testing laboratories on a 6-inch depth of uncompressed shredded tire samples produced by four manufacturers. The tests reported critical heights, which varied from 10 feet to greater than 12 feet. It is recommended that persons seeking to install shredded tires as a protective surface request test data from the supplier showing the critical height of the material when it was tested in accordance with ASTM F1292.

Operating Instructions:

***NOTE**: Your children's safety is our #1 concern. Observing the following statements and warnings reduces the likelihood of serious or fatal injury. Please review these safety rules regularly with your children.*

1. *This Playcenter is designed for specific number of occupants whose combined weight **should not exceed** a designated weight on the elevated floor or the swing area, the total Unit capacity is outlined in the Basic Setup Dimensions section of instruction manual. The maximum fall height and recommended play area is also available in the Basic Setup Dimensions section of the manual for the specific unit.*
2. *On-site adult supervision is **required**.*
3. *Instruct children **not** to walk close to, in front of, behind, or between moving swings or other moving playground equipment.*
4. *Instruct children to sit in and **never** stand on swings*
5. *Instruct children **not** to twist the chains and ropes and not to loop them over the top support bar, since this may reduce the strength of the chain or rope.*
6. *Instruct children **not** to jump from swings or other playground equipment in motion.*
7. *Instruct children to **not to push** empty seats. The seat may hit them and cause serious injury.*
8. *Instruct and teach children to sit in the center of the swings with their full weight on the seats.*
9. *Instruct children **not** to use the equipment in a manner other than intended.*
10. *Instruct children to **always** go down slides feet first. Never slide head first.*
11. *Instruct children to **look** before they slide to make sure no one is at the bottom.*
12. *Instruct children to **never** run up a slide, as this increases their chances of falling.*
13. *The parents should **dress children appropriately**. (Examples would include the use of well-fitting shoes and the avoidance of ponchos, scarfs, and other loose-fitting clothing that is potentially hazardous while using equipment).*
14. *Instruct children **not** to climb when the equipment is wet.*
15. *Instruct children to **never** jump from a fort deck. They should always use the ladder, ramp or slide.*
16. *Instruct children to **never** crawl or walk across the top of monkey bars.*
17. *Instruct children to **never** crawl on top of a fort roof.*

18. *Verify that any suspended climbing ropes, chain, or cable are secured at both ends and that they cannot be looped back on it.*
19. *Instruct children **not** to attach items to the playground equipment that are not specifically designed for use with the equipment, such as, but not limited to, jump ropes, clothesline, pet leashes, cables and chain as they may cause a strangulation hazard.*
20. *Instruct children to **never** wrap their legs around swing chain.*
21. *Instruct children to **never** slide down the swing chain.*
22. *Instruct children to remove their bike or other sports helmet before playing on playground equipment.*

Maintenance Instructions:

At the beginning of each play season:

• Tighten all hardware.
• Lubricate all metallic moving parts per manufacturer's instructions.
• Check all protective coverings on bolts, pipes, edges, and corners. Replace if they are loose, cracked, or missing.
• Check all moving parts including swing seats, ropes, cables, and chains for wear, rust, or other deterioration. Replace as needed.
• Check metal parts for rust. If found, sand and repaint using a non Lead-based paint meeting the requirements of 16 CFR 1303.
• Check all wood members for deterioration and splinters. Sand down splinters and replace deteriorating wood members.
• Reinstall any plastic parts, such as swing seats or any other items that were removed for the cold season.
• Rake and check depth of loose fill protective surfacing materials to prevent compaction and to maintain appropriate depth. Replace as necessary.

Twice a month during play season:

• Tighten all hardware.
• Check all protective coverings on bolts, pipes, edges, & corners. Replace if they are loose, cracked, or missing.
• Rake and check depth of loose fill protective surfacing materials to prevent compaction and to maintain appropriate depth. Replace as necessary.
• Once a month during play season.
• Lubricate all metallic moving parts per manufacturer's instructions.
• Check all moving parts including swing seats, ropes, cables, and chains for wear, rust, or other deterioration. Replace as needed.

At the end of each play season or when the temperature drops below 32° F:

• Remove plastic swing seats and other items as specified by the manufacturer and take indoors or do not use.
• Rake and check depth of loose fill protective surfacing materials to prevent compaction and to maintain appropriate depth. Replace as necessary.

Owners shall be responsible for maintaining the legibility of the warning labels.

Additional Maintenance:

• Check the swing beam and hardware every two weeks due to wood expansion and contraction. It is particularly important that this procedure be followed at the beginning of each season.
• Inspect wood parts monthly. The grain of the wood sometimes will lift in the dry season causing splinters to appear. Light sand may be necessary to maintain a safe playing environment. Treat your playset with stain regularly, to help prevent severe checking/splitting and other weather damage.

• A waterbourne transparent stain has been applied to your playset. This is done for color only. Once or twice a year, depending on your climate conditions, you must apply some type of protection (sealant) to the wood of your unit. Prior to the application of sealant, lightly sand any "rough" spots on your playset. ***Please note this is a requirement of your warranty.***

• Assembling and maintaining the playset on a level location is very important. As your children play, your playset will slowly dig its way into the soil, and it is very important that it settles evenly. Make sure the playset is level and true one each year or at the beginning of each play season.

Disposal Instructions:

When the Playcenter use is no longer desired, it should be disassembled and disposed of in such a way that no unreasonable hazards will exist at the time the unit is discarded.

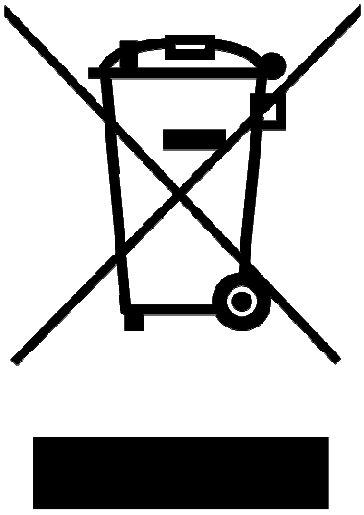

Third Party Assembly:

Customer may, in their sole discretion, elect to use a third party person or service to assemble this product. Backyard Discovery assumes no responsibility or liability for any charge incurred by the Customer for any assembly services'.
Please see our warranty for more information about damaged and missing part replacement coverage. Backyard Discovery will not reimburse Customer for the price of parts purchased.

APPENDIX A

Information on Playground Surfacing Materials:

The following information is from the ***United States Consumer Product Safety Commission's Information Sheet for playground surfacing material;*** *also see the following website for additional information:* ***www.cpsc.gov/cpscpub/pubs/323.html****.*

X3. SECTION 4 OF THE CONSUMER PRODUCT SAFETY COMMISSION'S OUTDOOR HOME PLAYGROUND SAFETY HANDBOOK[9]

X3.1 Select Protective Surfacing—One of the most important things you can do to reduce the likelihood of serious head injuries is to install shock-absorbing protective surfacing under and around your play equipment. The protective surfacing should be applied to a depth that is suitable for the equipment height in accordance with ASTM Specification F 1292. There are different types of surfacing to choose from; whichever product you select, follow these guidelines:

X3.1.1 Loose-Fill Materials:

X3.1.1.1 Maintain a minimum depth of 9 inches of loose-fill materials such as wood mulch/chips, engineered wood fiber (EWF), or shredded/recycled rubber mulch for equipment up to 8 feet high; and 9 inches of sand or pea gravel for equipment up to 5 feet high. NOTE: An initial fill level of 12 inches will compress to about a 9-inch depth of surfacing overtime. The surfacing will also compact, displace, and settle, and should be periodically refilled to maintain at least a 9-inch depth.

X3.1.2 Use a minimum of 6 inches of protective surfacing for play equipment less than 4 feet in height. If maintained properly, this should be adequate. (At depths less than 6 inches, the protective material is too easily displaced or compacted.) NOTE: Do not install home playground equipment over concrete, asphalt, or any other hard surface. A fall onto a hard surface can result in serious injury to the equipment user. Grass and dirt are not considered protective surfacing because wear and environmental factors can reduce their shock absorbing effectiveness. Carpeting and thin mats are generally not adequate protective surfacing. Ground level equipment such as a sandbox, activity wall, playhouse or other equipment that has no elevated play surface – does not need any protective surfacing.

X3.1.3 Use containment, such as digging out around the perimeter and/or lining the perimeter with landscape edging. Don't forget to account for water drainage.

X3.1.3.1 Check and maintain the depth of the loose-fill surfacing material. To maintain the right amount of loose-fill materials, mark the correct level on play equipment support posts. That way you can easily see when to replenish and/or redistribute the surfacing.

X3.1.3.2 ***Do not*** *install loose-fill surfacing over hard surfaces such as concrete or asphalt.*

X3.1.4 Poured-In-Place Surfaces or Pre-Manufactured Rubber Tiles — You may be interested in using surfacing other than loose-fill materials – like rubber tiles or poured-in-place surfaces.

X3.1.4.1 Installations of these surfaces generally require a professional and are not "do-it-yourself" projects.

X3.1.4.2 Review surface specification before purchasing this type of surfacing. Ask the installer/manufacturer for a report showing that the product has been tested to the following safety standard: ASTM F 1292 Standard Specification for Impact Attenuation of Surfacing Materials within the Use Zone of Playground Equipment. This report should show the specific height for which the surface is intended to protect against serious head injury. This height should be equal to or greater than the fall height – vertical distance between a designated play surface (elevated surface for standing, sitting, or climbing) and the protective surfacing below – of your play equipment.

X3.1.4.3 Check the protective surfacing frequently for wear.

X3.1.5 Placement — Proper placement and maintenance of protective surfacing is essential. Be sure to:

X3.1.5.1 Extend surfacing at least 6 feet from the equipment in all directions.

X3.1.5.2 For to-fro swings, extend protective surfacing in front of and behind the swing to a distance equal to twice the height of the top bar from which the swing is suspended.

[9] *This information has been extracted from the CPSC publications "Playground Surfacing — Technical Information Guide" and "Handbook for Public Playground Safety." Copies of these reports can be obtained by sending a postcard to the: Office of Public Affairs, U.S. Consumer Product Safety Commission, Washington, D.C., 20207 or call the toll-free hotline: 1-800-638-2772.*

The American Society for Testing and Materials takes no position respecting the validity of any parent right asserted in connection with any item mentioned in this standard. Users of this standard are expressly advised that determination of the validity of any such parent rights, and the risk of infringement of such rights, are entirely their own responsibility.

The standard is subject to revision at any time by the responsible technical committee and must be reviewed every five years and if not revised, either approved or withdrawn. Your comments are invited either for revision of this standard or for additional standards and should be addressed to ASTM Headquarters. Your comments will receive careful consideration at a meeting of the responsible technical committee, which you may attend. If you feel that your comments have not received a fair hearing you should make your views known to the ASTM Committee on Standards. 100 Barr Harbor Drive, West Conshohocken, PA 19428.

Play Set Assembly Manual FAQs:

1. Does the area for the playset need to be level?

Yes. Backyard Discovery recommends the playset be positioned on a flat level area for maximum safety and durability. The stakes provided should be used to secure it firmly to the ground.

2. What size area is recommended for the playset?

Backyard Discovery recommends at least a 6' (six foot) perimeter around and above the playset for maximum safety.

3. What age range is appropriate for the playsets?

Backyard Discovery playsets are recommended for children ages 3 – 10 years.

4. Is the wood treated with chemicals?

Backyard Discovery uses 100% Chinese Cedar wood which is naturally bug resistant, decay and rot resistant. To help ensure your child's safety, our wood is completely chemical free and we do not use pressure-treated wood. The stain we use is a top coat using a water-based product that is for appearance only.

5. How often should the playset be stained?

Backyard Discovery recommends the playset be stained once each year. A water or oil based stain can be used at the customer's discretion.

6. Why does it seem that my swing set is developing cracks?

Wood is a natural material; no two pieces are exactly alike. Each piece has its own characteristics and personality and reacts differently to climate changes. When any wood product is exposed to the elements, it develops "wood checks". A check is the radial separation of the wood fibers running with the grain of the wood. These are caused by the varying temperature and moisture conditions. A check is not a crack – it does not affect the strength or durability of the wood or structural integrity of the play set.

7. Do Backyard Discovery playsets come with a warranty?

Yes. All Backyard Discovery products carry a 1-year replacement warranty on all parts for manufacturer's defect. Our wood carries a 5 year warranty on rot and decay as well. Please see warranty details for more information.

8. What is the best way to get started assembling the playset?

Backyard Discovery recommends taking all the parts out of the boxes and arranging them by part number before you begin any assembly. This will not only allow faster assembly, but will also identify any parts that may be missing or damaged so they can be replaced before assembly. If parts are missing or need replacement, go to www.swingsetsonline.com/support.aspx and follow the prompts to order them. Next, read the assembly manual and get the tools ready for the job as recommended in the manual. If the assembly manual is lost or misplaced a new one can be printed from Backyard Discovery's website: www.swingsetsonline.com.

9. The playset seems to rock or sway too much. What's wrong?

Rocking is caused by uneven ground or obstructions such as rocks, roots, etc. under the ground rails. These should be removed and the ground underneath re-leveled to prevent rocking. Also ensure the playset is securely staked to the ground using the stakes provided.

10. The 2"x4" boards do not measure 2"x 4". Why not?

In the U.S. it is common practice to describe lumber dimensions using the rough cut sizes from the sawmill and not the finished dimensions. Retailers, home stores, etc. all use this accepted practice for describing lumber dimensions. However, Backyard Discovery playsets are designed and constructed using the actual dimensions so everything fits properly and remains so during the life of the playset.

11. The end beam is not straight up and down. Why not?

This is normal. Backyard Discovery designs playsets this way to ensure the strongest structure possible. The slight angle adds strength and reduces rocking and twisting.

12. The S-hooks for the swings won't close. What is wrong?

Backyard Discovery recommends placing them on a hard surface such as concrete (don't do this on anything that will dent such as metal or finished wood or glass which will break!). It will take quite a few strokes, but the hooks will close.

For more information and frequently asked questions, please refer to our website at www.swingsetsonline.com.

Tools Required for Installation:

(These are the tools that are generally required for assembly of our outdoor products. These tools are not included with the outdoor product purchase.)

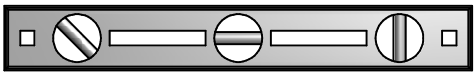

(Level 24")

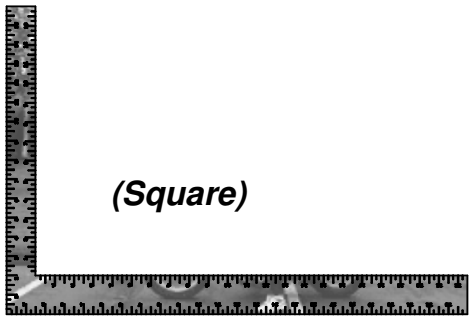

(Square)

(Phillips Screw Driver)

(Claw Hammer)

(Tape Measure)

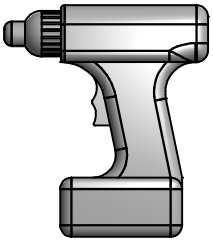

(Cordless Drill or Electric Drill)

(1/8" & 7/16" Drill Bits)

(Drill Attachments: Phillips Head)

(An Adult w/ an Adult Helper)

(Ladder)

(Open End Wrenches 1/2")

(Rubber Mallet - Optional)

Basic Setup Dimensions

Place the set on level ground, not less than 6 ft [2 m] from any structure or obstruction such as a fence, garage, house, overhanging branches, laundry lines, or electrical wires.

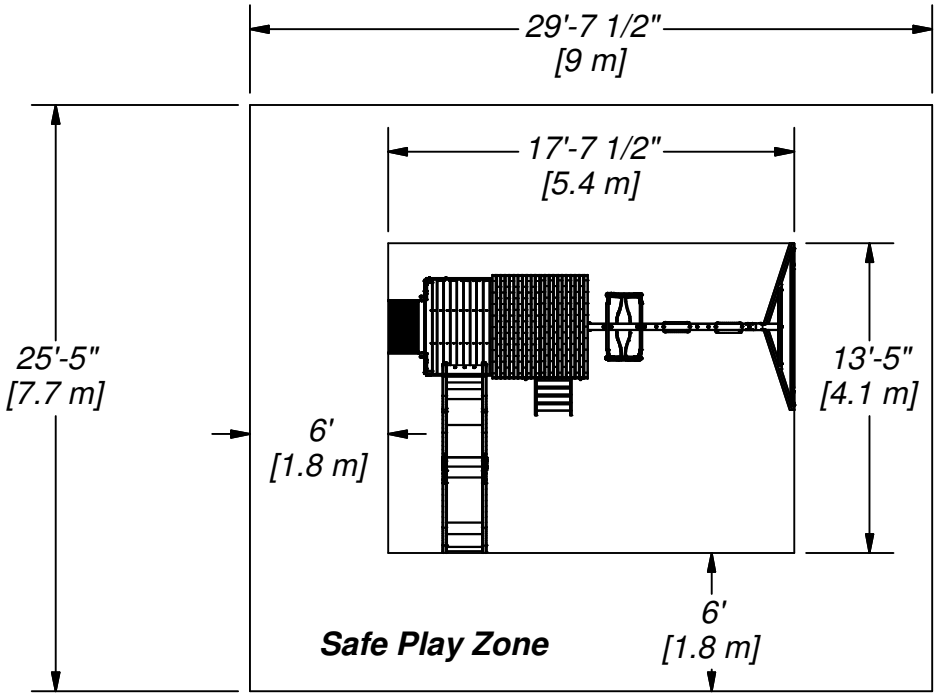

General Information:

Your set has been designed and engineered for children only and for residential use only.
A maximum of 150 lbs. per child is recommended for play activities designed for individual use.
A maximum of 120 lbs. per child is recommended for play activities designed for multiple child use.
A maximum of 9 children is recommended for this swing set.

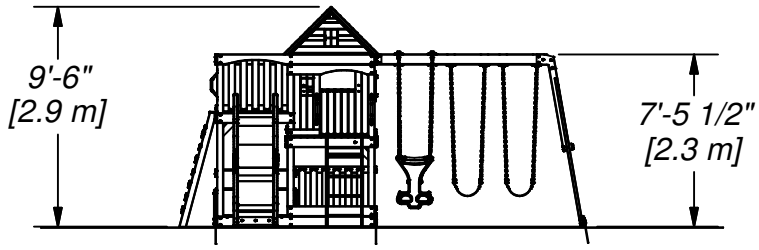

Safe play height: 15'-6" [4.7 m]
Maximum fall height: 7'-5 1/2" [2.3 m]

Important Assembly Notes

1) While assembling unit, take time before and after each phase to make sure fort is level. If fort is not level, assembly will be difficult and improper assembly may result. Extra care must be taken to ensure the fort is square.
2) Tighten bolts securely, tighten nuts on bolts flush to the tube or member.
3) Pay close attention to the ITEMS NEEDED FOR EACH PHASE. They can be a valuable aid when sorting your wood and hardware. Assembly will be made easier if items are sorted by phase.
4) Pay close attention to make sure you are using the correct hardware in the correct phases. Using incorrect hardware may result in improper assembly.
5) Whenever a T-nut is used, follow these directions. Place T-nut in pre-drilled hole. Tap in with hammer. Place bolt with washers in the opposite side. Hand tighten to make sure the bolt is in the T-nut. DO NOT over tighten.
6) Read the steps of each phase thoroughly. The written steps may include important information not shown in the illustrations.

Parts Identification

Wood Components

(NOT TO SCALE)

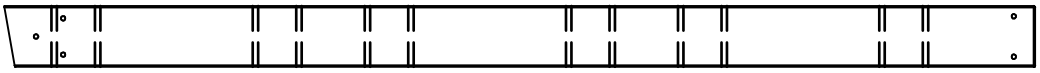

(1) ***A50 - SWING BEAM - W102416***
3 3/8"x5 1/4"x89 1/2" (86x134x2274)

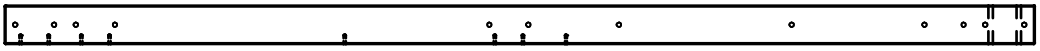

(1) ***E1 - RIGHT FRONT TOWER LEG - W4L05380***
1 3/8"x3 3/8"x89 1/2" (36x86x2274)

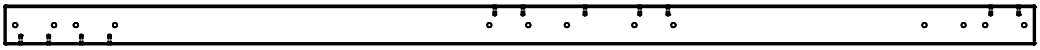

(1) ***E2 - CENTER FRONT TOWER LEG - W4L05382***
1 3/8"x3 3/8"x89 1/2" (36x86x2274)

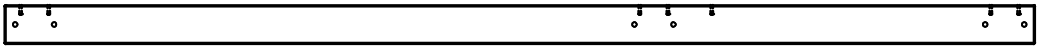

(1) ***E3 - LEFT FRONT TOWER LEG - W4L05381***
1 3/8"x3 3/8"x89 1/2" (36x86x2274)

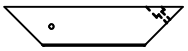

(8) ***E4 - DECK BRACE - W100615***
1 3/8"x3 3/8"x15 1/2" (36x86x394)

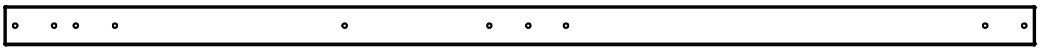

(1) ***E5 - RIGHT REAR TOWER LEG - W2A01691***
1 3/8"x3 3/8"x89 1/2" (36x86x2274)

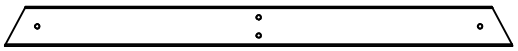

(1) ***E50 - END SUPPORT - W100949***
1 3/8"x3 3/8"x44 1/8" (36x86x1120)

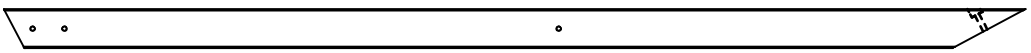

(2) ***E51 - ANGLE BRACE - W100948***
1 3/8"x3 3/8"x88 3/4" (36x86x2254)

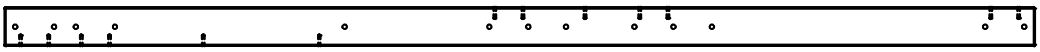

(1) ***E6 - CENTER REAR TOWER LEG - W4L05379***
1 3/8"x3 3/8"x89 1/2" (36x86x2274)

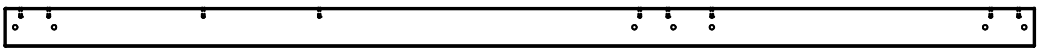

(1) ***E7 - LEFT REAR TOWER LEG - W100714***
1 3/8"x3 3/8"x89 1/2" (36x86x2274)

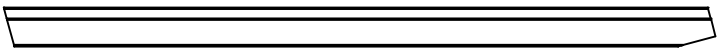

(1) ***E72 - LEFT RAIL - W100036***
1 3/8"x3 3/8"x61 3/4" (36x86x1570)

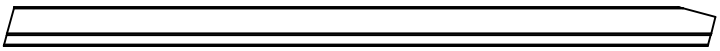

(1) ***E73 - RIGHT RAIL - W100037***
1 3/8"x3 3/8"x61 3/4" (36x86x1570)

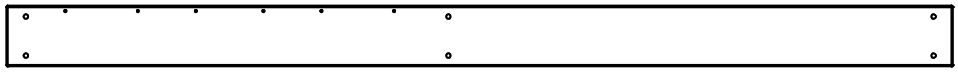

(2) ***G1 - BASE BOARD - W4L05396***
5/8"x5 1/4"x82 1/4" (16x134x2088)

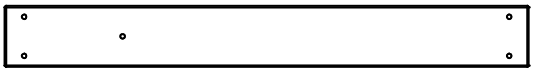

(1) ***G10 - FLOOR RAIL - W100626***
1"x5 1/4"x45 1/2" (24x134x1156)

(2) ***G11 - PICNIC TABLE TOP - W4L05408***
5/8"x5 1/4"x42" (16x134x1066)

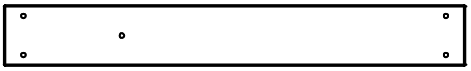

(2) ***G12 - FLOOR RAIL - W4L05377***
1"x5 1/4"x40 1/8" (24x134x1018)

Parts Identification

Wood Components

(NOT TO SCALE)

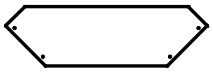

(2) ***G13 - SAND BOX SEAT - W100629***
1"x5 1/4"x17 3/4" (24x134x450)

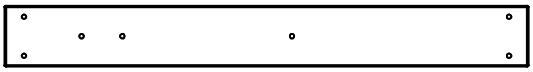

(1) ***G15 - FLOOR RAIL - W100793***
1"x5 1/4"x45 1/2" (24x134x1156)

(1) ***G2 - WALL RAIL - W100618***
1"x5 1/4"x82 1/4" (24x134x2088)

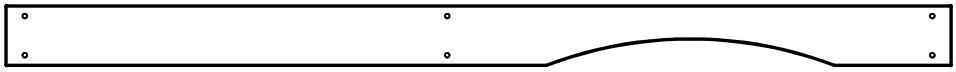

(1) ***G3 - WALL RAIL - W100619***
1"x5 1/4"x82 1/4" (24x134x2088)

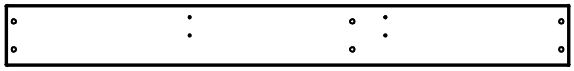

(2) ***G4 - FLOOR RAIL - W4L05402***
5/8"x5 1/4"x49" (16x134x1244)

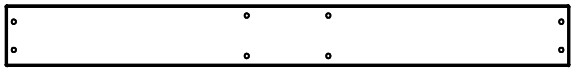

(1) ***G5 - WALL RAIL/SWING MOUNT - W100621***
1"x5 1/4"x49" (24x134x1244)

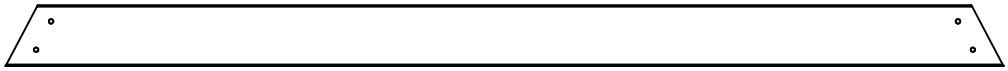

(1) ***G50 - GROUND BOARD - W100947***
1"x5 1/4"x86 3/4" (24x134x2202)

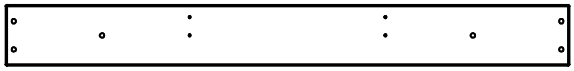

(1) ***G6 - FLOOR RAIL - W100622***
1"x5 1/4"x49" (24x134x1244)

(2) ***G7 - FLOOR RAIL - W100623***
1"x5 1/4"x49" (24x134x1244)

(2) ***G8 - WALL RAIL - W100624***
1"x5 1/4"x49" (24x134x1244)

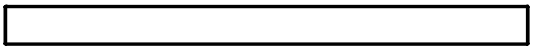

(2) ***H1 - FLOOR JOIST - W100630***
1"x3 3/8"x45 1/2" (24x86x1156)

(10) ***H10 - BOTTOM FLOOR BOARD SUPPORT - W100677***
1"x3 3/8"x5 1/4" (24x86x134)

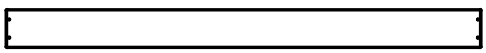

(2) ***H2 - PICNIC TABLE SEAT - W4L05409***
1"x3 3/8"x41 3/8" (24x86x1050)

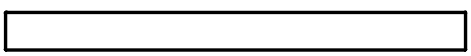

(2) ***H3 - FLOOR JOIST - W100632***
1"x3 3/8"x40 1/8" (24x86x1018)

Parts Identification

Wood Components

(NOT TO SCALE)

(2) ***H6 - SEAT UPRIGHT - W100635***
1"x3 3/8"x19" (24x86x482)

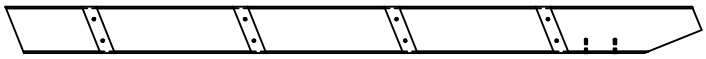

(1) ***H74 - LEFT UPRIGHT - W100608***
1"x3 3/8"x50 3/4" (24x86x1290)

(1) ***H75 - RIGHT UPRIGHT - W100609***
1"x3 3/8"x50 3/4" (24x86x1290)

(4) ***H76 - LADDER RUNG - W100611***
1"x3 3/8"x18 1/8" (24x86x460)

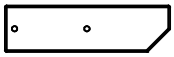

(2) ***H8 - TABLE SUPPORT - W100637***
1"x3 3/8"x12" (24x86x306)

(2) ***H9 - FLOOR JOIST - W100638***
1"x3 3/8"x35 3/4" (24x86x908)

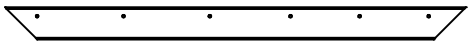

(4) ***J1 - ROOF RAFTER - W4L05410***
1"x2 3/8"x33 5/8" (24x60x854)

(1) ***K1 - WALL RAIL - W100639***
5/8"x5 1/4"x45 1/2" (16x134x1156)

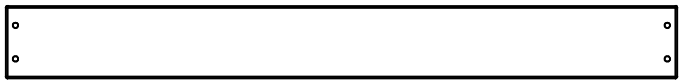

(3) ***K2 - BASE/SAND BOX BOARD - W4L05398***
5/8"x5 1/4"x49" (16x134x1244)

(1) ***K3 - FLOOR RAIL - W4L05404***
5/8"x5 1/4"x49" (16x134x1244)

(2) ***K4 - TABLE SUPPORT - W4L05407***
5/8"x3 3/8"x13 1/2" (16x86x342)

(2) ***K5 - GROUND BOARD - W4L05397***
5/8"x5 1/4"x45 1/2" (16x134x1156)

(3) ***L1 - OUTSIDE FILLER FLOOR BOARD - W4L05406***
5/8"x4 3/8"x46" (16x112x1168)

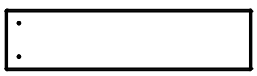

(4) ***L2 - WALL BOARD - W100641***
5/8"x4 3/8"x18" (16x112x456)

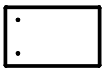

(4) ***L3 - WALL BOARD - W100642***
5/8"x4 3/8"x7" (16x112x178)

Parts Identification

Wood Components

(NOT TO SCALE)

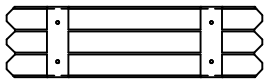

(3) ***L73 - WINDOW SHUTTER - W100786***
5/8"x4 3/8"x16" (16x112x406)

(2) ***M1 - ROOF CAP - W4L05369***
5/8"x3 3/8"x51 7/8" (16x86x1318)

(1) ***M10 - WALL BOARD - W100652***
5/8"x3 3/8"x35" (16x86x888)

(1) ***M102 - ATTACHMENT BOARD - W4L05242***
5/8"x3 3/8"x27 7/8" (16x86x707)

(1) ***M108 - TOP BOARD - W103105***
5/8"x3 3/8"x27 7/8" (16x86x707)

(1) ***M11 - WALL RAIL - W100653***
5/8"x3 3/8"x40 1/8" (16x86x1018)

(1) ***M12 - WINDOW TRIM - W100654***
5/8"x3 3/8"x32" (16x86x812)

(7) ***M13 - WALL BOARD - W100655***
5/8"x3 3/8"x24 1/4" (16x86x616)

(2) ***M14 - PICNIC SEAT SUPPORT - W4L05371***
5/8"x3 3/8"x22" (16x86x558)

(2) ***M15 - GABLE BOARD - W100657***
5/8"x3 3/8"x19" (16x86x482)

(2) ***M16 - WALL BOARD - W100658***
5/8"x3 3/8"x21" (16x86x532)

(1) ***M18 - WALL RAIL - W100660***
5/8"x3 3/8"x16 7/8" (16x86x430)

(4) ***M19 - GABLE BOARD - W100661***
5/8"x3 3/8"x15 1/4" (16x86x387)

(1) ***M2 - FLOOR BOARD - W4L05411***
5/8"x3 3/8"x46" (16x86x1168)

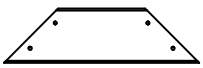

(2) ***M20 - GABLE BOARD - W100662***
5/8"x3 3/8"x12 1/4" (16x86x310)

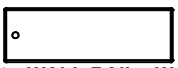

(2) ***M21 - WALL RAIL - W4L05383***
5/8"x3 3/8"x10 1/2" (16x86x268)

Parts Identification

Wood Components

(NOT TO SCALE)

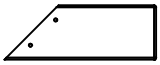

(4) ***M22 - GABLE BOARD - W100664***
5/8"x3 3/8"x9 1/2" (16x86x241)

(2) ***M23 - WINDOW TRIM - W100665***
5/8"x3 3/8"x12 7/8" (16x86x328)

(9) ***M24 - WALL BOARD - W4L04632***
5/8"x3 3/8"x29 7/8" (16x86x758)

(13) ***M27 - BOTTOM WALL BOARD - W4L04580***
5/8"x3 3/8"x21 3/8" (16x86x544)

(2) ***M29 - WALL BOARD - W100666***
5/8"x3 3/8"x5" (16x86x126)

(20) ***M3 - FLOOR BOARD - W4L05400***
5/8"x3 3/8"x50 7/8" (16x86x1292)

(1) ***M30 - WALL BOARD - W4L05378***
5/8"x3 3/8"x35" (16x86x888)

(2) ***M4 - GABLE BOARD - W100646***
5/8"x3 3/8"x44" (16x86x1118)

(3) ***M5 - WALL RAIL - W100647***
5/8"x3 3/8"x49" (16x86x1244)

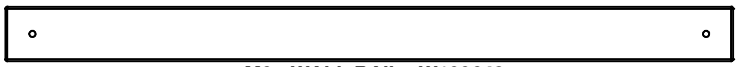

(2) ***M6 - WALL RAIL - W100648***
5/8"x3 3/8"x45 1/2" (16x86x1156)

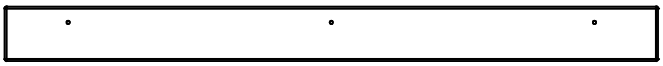

(2) ***M7 - WALL CAP - W100649***
5/8"x3 3/8"x40 7/8" (16x86x1038)

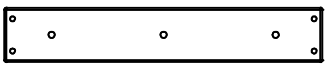

(1) ***M70 - SLIDE BED SUPPORT - W100935***
5/8"x3 3/8"x19 7/8" (16x86x505)

(1) ***M73 - REAR SUPPORT - W100610***
5/8"x3 3/8"x19 1/4" (16x86x488)

(10) ***M74 - ROCK WALL BOARD - W100987***
5/8"x3 3/8"x26 5/8" (16x86x675)

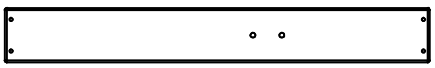

(4) ***M75 - ROCK WALL BOARD - W4L05240***
5/8"x3 3/8"x26 5/8" (16x86x675)

Parts Identification

Wood Components

(NOT TO SCALE)

(4) ***M76 - ROCK WALL BOARD - W4L05239***
5/8"x3 3/8"x26 5/8" (16x86x675)

(11) ***M8 - WALL BOARD - W100650***
5/8"x3 3/8"x41" (16x86x1040)

(6) ***M9 - WALL BOARD - W100651***
5/8"x3 3/8"x32" (16x86x812)

(1) ***N1 - FLOOR BOARD - W4L05399***
5/8"x2 3/8"x50 7/8" (16x60x1292)

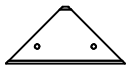

(2) ***N2 - MENDING PLATE - W4L05370***
5/8"x2 3/8"x5" (16x60x126)

(2) ***N3 - WALL BOARD - W100669***
5/8"x2 3/8"x18" (16x60x456)

(4) ***N4 - GABLE BOARD - W100670***
5/8"x2 3/8"x11 7/8" (16x60x301)

(2) ***N5 - WALL BOARD - W100671***
5/8"x2 3/8"x7" (16x60x178)

(6) ***O1 - WALL SUPPORT - W100672***
5/8"x1 3/8"x13" (16x34x330)

(1) ***O2 - WALL SUPPORT - W100673***
5/8"x1 3/8"x10" (16x34x254)

(1) ***O3 - SAFETY RAIL - W4L05395***
5/8"x1 3/8"x20 1/2" (16x34x520)

(6) ***O4 - WINDOW SHUTTER SLAT - W100787***
5/8"x1 3/8"x5 3/8" (16x34x136)

(1) ***SP50 - SWING BEAM SUPPORT - W102417***
3 3/8"x3 3/8"x49 3/8" (86x86x1254)

(4) ***T1 - SEAT SUPPORT - W4L05373***
1"x1 3/8"x4 3/8" (24x34x112)

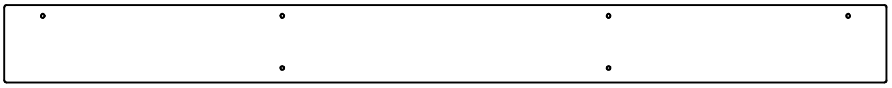

(1) ***Y1 - OUTSIDE FILLER FLOOR BOARD - W4L05752***
5/8"x4"x46" (16x102x1168)

Parts Identification

Wood Components

(NOT TO SCALE)

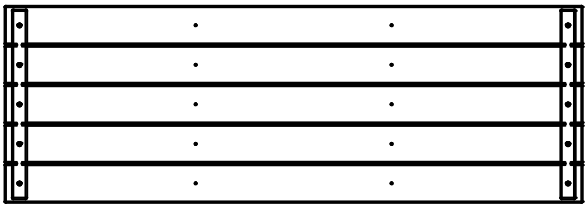

(1) ***FP1 - FLOOR PANEL - W2A01679***
1 5/8"x17 1/8"x50 1/4" (40x434x1276)

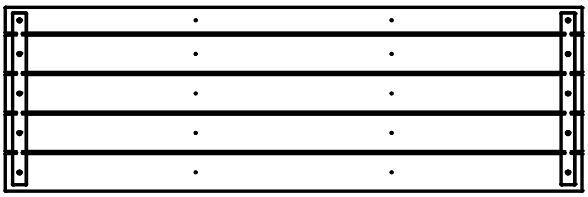

(1) ***FP2 - FLOOR PANEL - W2A01680***
1 5/8"x16 1/8"x50 1/4" (40x408x1276)

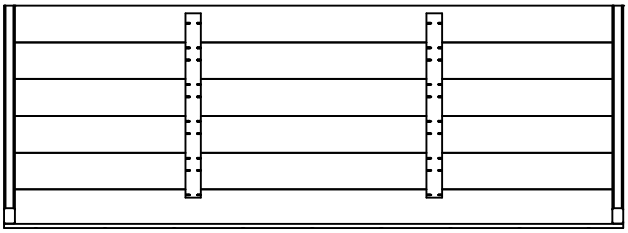

(2) ***RP1 - ROOF PANEL - W2A01677***
1 3/4"x19 1/4"x53 3/4" (45x490x1366)

(2) ***RP2 - ROOF PANEL - W2A01678***
1 3/4"x16 1/4"x53 3/4" (45x412x1366)

Parts Identification

Hardware

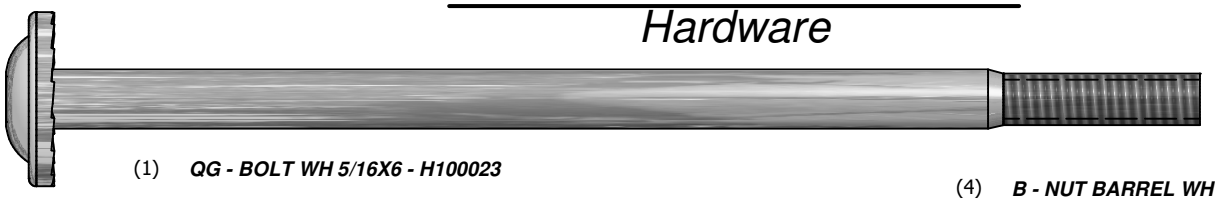

(1) ***QG - BOLT WH 5/16X6 - H100023***

(4) ***B - NUT BARREL WH 5/16x5/8 - H100004***

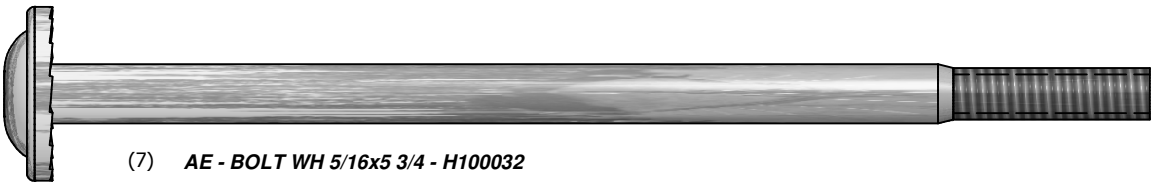

(7) ***AE - BOLT WH 5/16x5 3/4 - H100032***

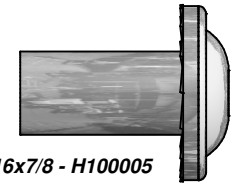

(15) ***D - NUT BARREL WH 5/16x7/8 - H100005***

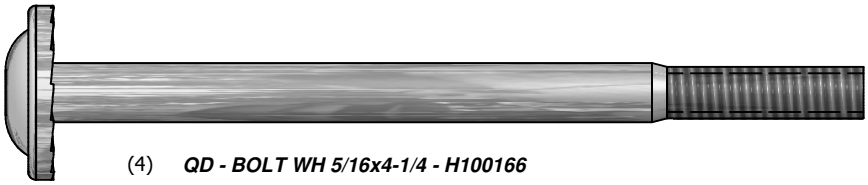

(4) ***QD - BOLT WH 5/16x4-1/4 - H100166***

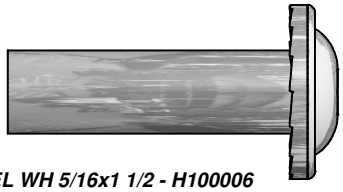

(11) ***C - NUT BARREL WH 5/16x1 1/2 - H100006***

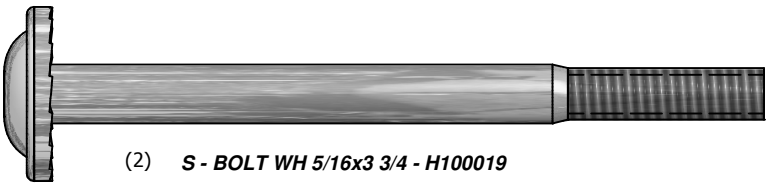

(2) ***S - BOLT WH 5/16x3 3/4 - H100019***

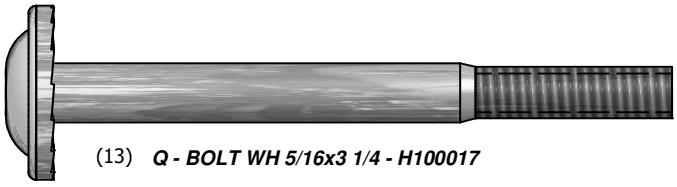

(13) ***Q - BOLT WH 5/16x3 1/4 - H100017***

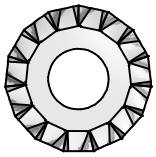

(170) ***AC - WASHER LOCK EXT 8x19 - H100030***

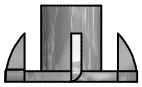

(26) ***BE - T-NUT 1/4 - H100072***

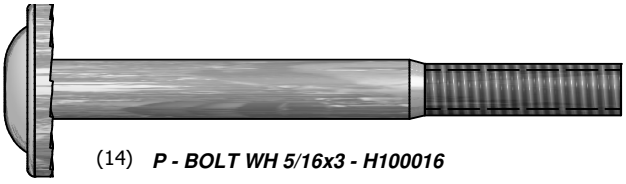

(14) ***P - BOLT WH 5/16x3 - H100016***

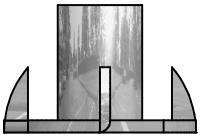

(9) ***BF - T-NUT 3/8 - H100073***

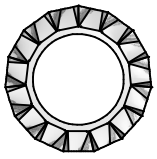

(16) ***AD - WASHER LOCK EXT 12x19 - H100031***

(105) ***BG - T-NUT 5/16 - H100074***

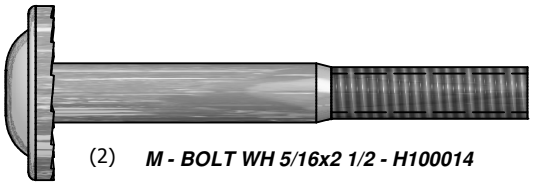

(2) ***M - BOLT WH 5/16x2 1/2 - H100014***

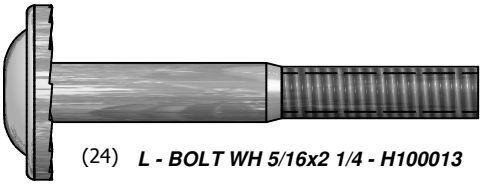

(24) ***L - BOLT WH 5/16x2 1/4 - H100013***

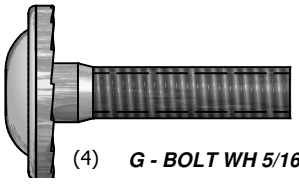

(4) ***G - BOLT WH 5/16x1 1/4 - H100009***

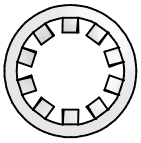

(9) ***CF - WASHER LOCK INT 10x18 - H100107***

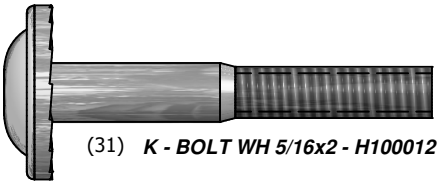

(31) ***K - BOLT WH 5/16x2 - H100012***

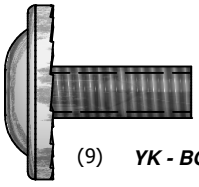

(9) ***YK - BOLT WH 5/16x3/4 - H100222***

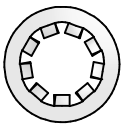

(26) ***CG - WASHER LOCK INT 8x15 - H100108***

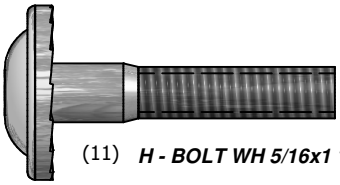

(11) ***H - BOLT WH 5/16x1 1/2 - H100010***

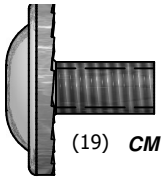

(19) ***CM - BOLT WH 5/16x1/2 - H100115***

Parts Identification

Hardware

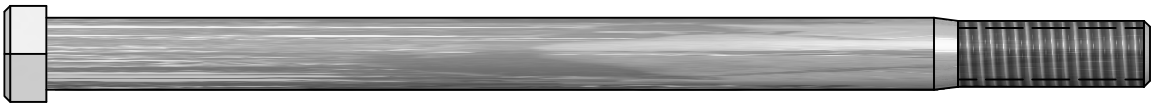

(9) ***AT - BOLT HEX 3/8x5 3/4 - H100056***

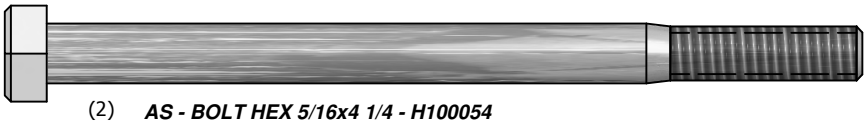

(2) ***AS - BOLT HEX 5/16x4 1/4 - H100054***

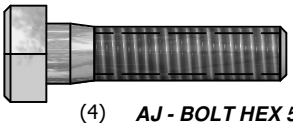

(4) ***AJ - BOLT HEX 5/16x1 1/4 - H100042***

(2) ***- T-40 TORX BIT - A100042***

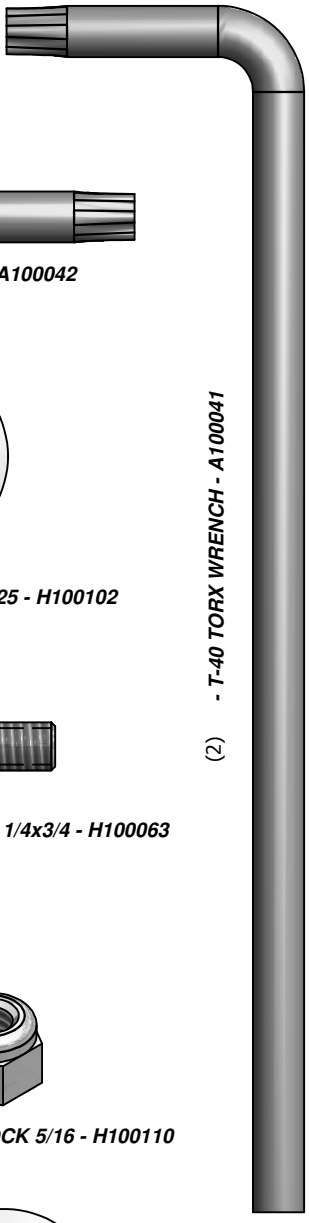

(2) ***- T-40 TORX WRENCH - A100041***

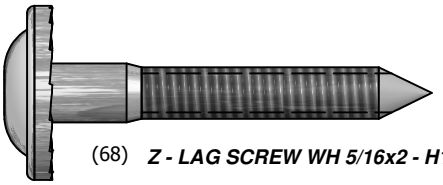

(68) ***Z - LAG SCREW WH 5/16x2 - H100027***

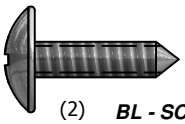

(2) ***BL - SCREW TAPPING 14x3/4 - H100083***

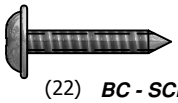

(22) ***BC - SCREW PWH 8x3/4 - H100070***

(2) ***CY - SCREW PWH 8x5/8 - H100128***

(313) ***BR - SCREW PFH 8x1 1/8 - H100088***

(284) ***BP - SCREW PFH 8x1 1/2 - H100086***

(65) ***BS - SCREW PFH 8x1 3/4 - H100089***

(24) ***CK - SCREW PFH 8x2 - H100111***

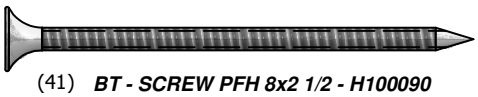

(41) ***BT - SCREW PFH 8x2 1/2 - H100090***

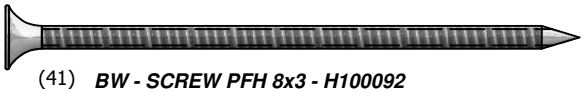

(41) ***BW - SCREW PFH 8x3 - H100092***

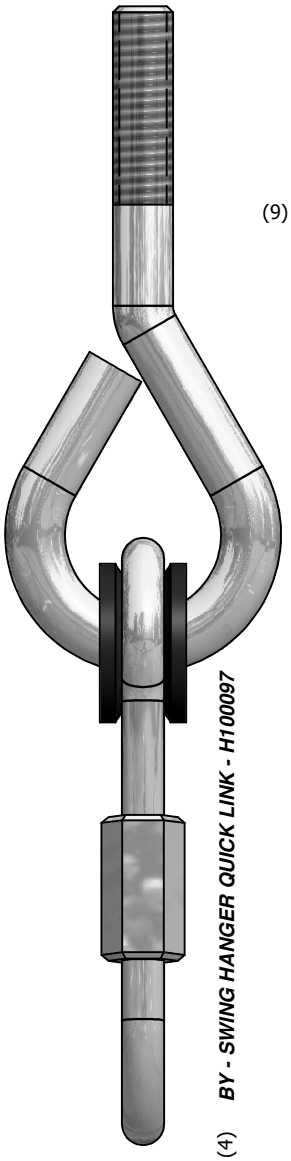

(4) ***BY - SWING HANGER QUICK LINK - H100097***

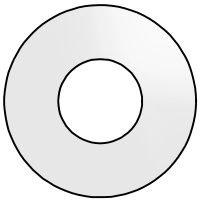

(9) ***CA - WASHER FLAT 11x25 - H100102***

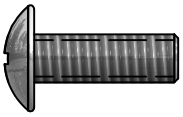

(26) ***BA - BOLT PTH 1/4x3/4 - H100063***

(13) ***CJ - NUT LOCK 5/16 - H100110***

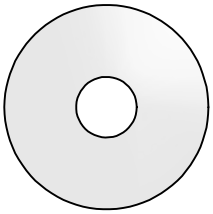

(22) ***CD - WASHER FLAT 8x27 - H100105***

(7) ***BX - WASHER SPLIT 5/16 - H100095***

Parts Identification

Accessories

(NOT TO SCALE)

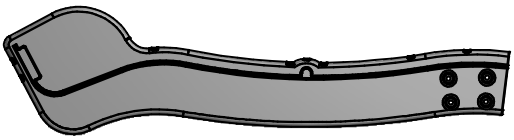

(1) ***DS - SLIDE RAIL 10' BOTTOM RIGHT GREEN - A100031***

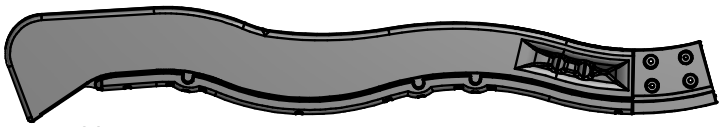

(1) ***TR - SLIDE RAIL 10' TOP RIGHT GREEN - A100033***

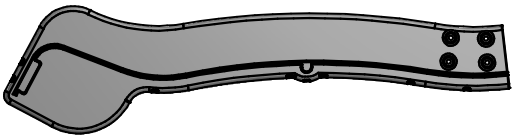

(1) ***DR - SLIDE RAIL 10' BOTTOM LEFT GREEN - A100030***

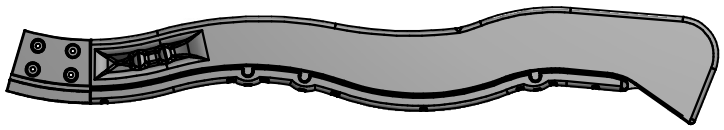

(1) ***DT - SLIDE RAIL 10' TOP LEFT GREEN - A100032***

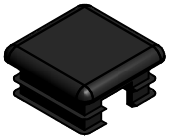

(4) ***EY - TUBING CAP GLIDER SUPPORT - A100067***

(4) ***FX - HAND GRIP METAL GREEN 381 c/c - A100118***

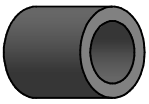

(4) ***EX - GLIDER BUSHING BYD GREEN - A100066***

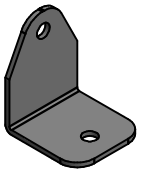

(1) ***EJ - L BRACKET 54x67 - A100053***

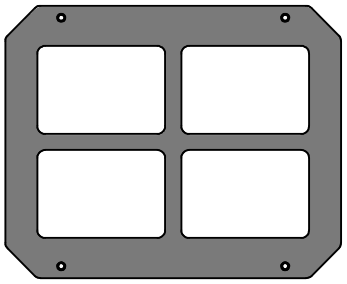

(3) ***GK - WINDOW 216x267 GREEN - A100146***

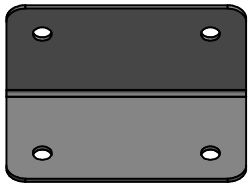

(2) ***GD - L BRACKET 66x66x127 - A100140***

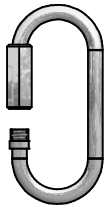

(8) ***FA - QUICK LINK - A100069***

(1) ***SQ - "A" REVISION TAG - A100314***

(6) ***- GROUND STAKE REBAR - A4M00527***

Parts Identification

Accessories

(NOT TO SCALE)

(1) ***DX - SLIDE BED 10' LIGHT GREEN - A100035***

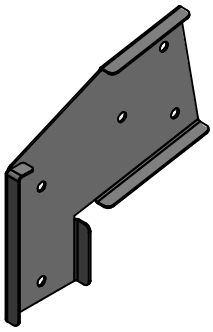

(1) ***TB - SWING BEAM EXTENSION BRACKET-LEFT - A100325***

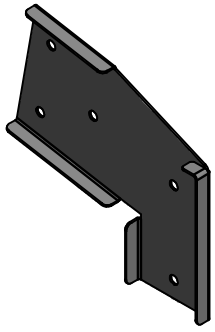

(1) ***TC - SWING BEAM EXTENSION BRACKET-RIGHT - A100326***

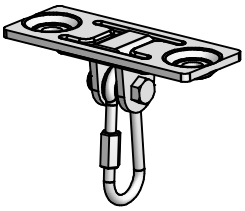

(4) ***SWING HANGER - A4M00505***

(2) ***- SWING SEAT GREEN - A6P00054***

(6) ***- GREEN HC ROCK #1 - A6P00036***

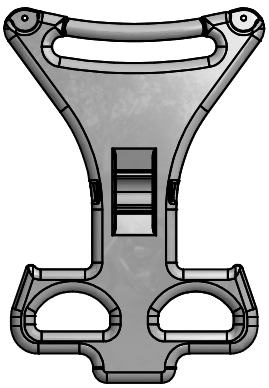

(2) ***DJ - GLIDER ARM LIGHT GREEN - A100021***

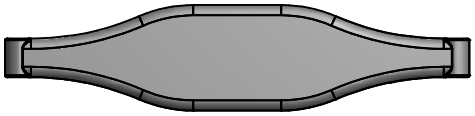

(1) ***DN - GLIDER SEAT DARK GREEN - A100025***

(6) ***- GREEN HC ROCK #2 - A6P00037***

(4) ***DW - SLIDE SUPPORT TUBE 21.34x505 - A100034***
21.34 OD x 2.77 W x 505

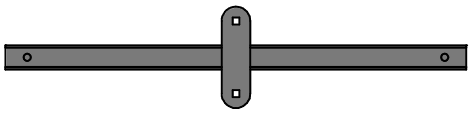

(2) ***EW - GLIDER SUPPORT BYD GREEN - A100065***

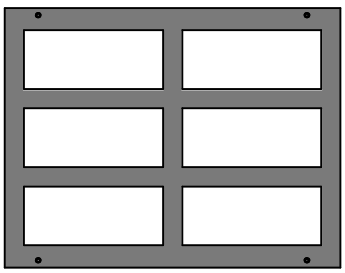

(2) ***HN - PLASTIC WINDOW BYD GREEN - A100010***

(4) ***FT - CHAIN GREEN 47" - A100096***

(4) ***EF - CHAIN GREEN 57" - A100047***

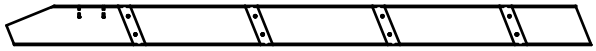

(1) ***H74 - LEFT UPRIGHT - W100608***
1"x3 3/8"x50 3/4" (24x86x1290)

(1) ***H75 - RIGHT UPRIGHT - W100609***
1"x3 3/8"x50 3/4" (24x86x1290)

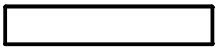

(4) ***H76 - LADDER RUNG - W100611***
1"x3 3/8"x18 1/8" (24x86x460)

4 FOOT LADDER ASSEMBLY
STEP 1

(16) ***SCREW PFH 8x2***

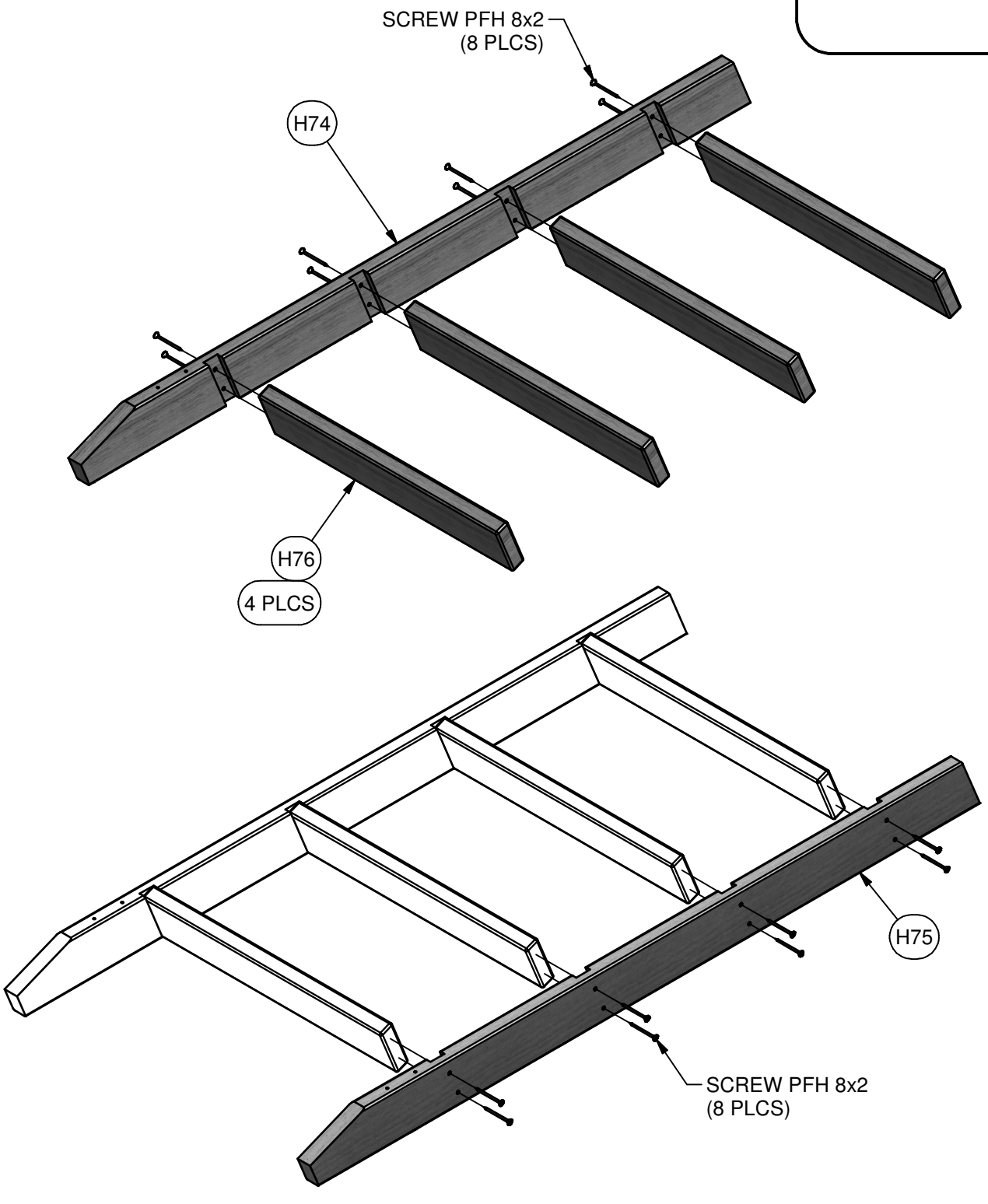

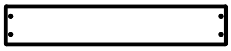

(1) ***M73 - REAR SUPPORT - W100610***
5/8"x3 3/8"x19 1/4" (16x86x488)

---

4 FOOT LADDER ASSEMBLY
STEP 2

(4) ***SCREW PFH 8x2***

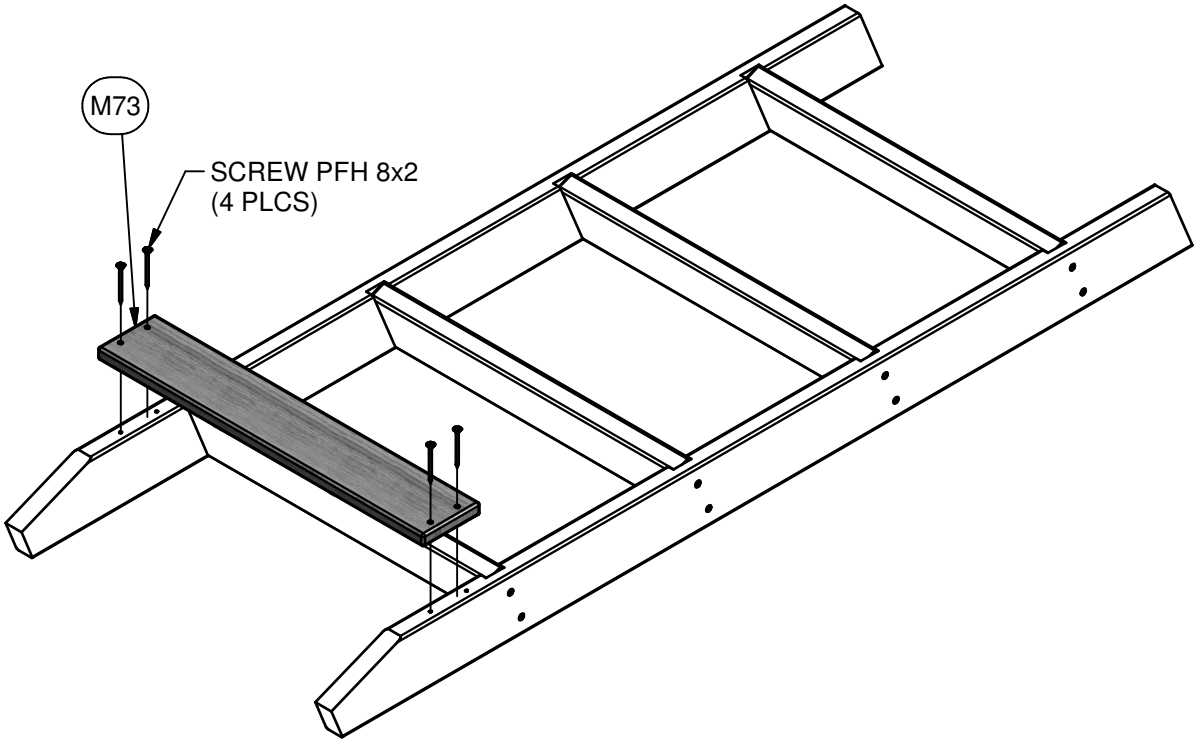

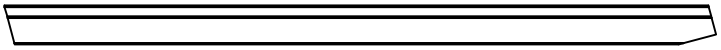

(1) ***E72 - LEFT RAIL - W100036***
1 3/8"x3 3/8"x61 3/4" (36x86x1570)

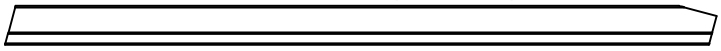

(1) ***E73 - RIGHT RAIL - W100037***
1 3/8"x3 3/8"x61 3/4" (36x86x1570)

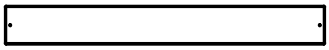

(1) ***M108 - TOP BOARD - W103105***
5/8"x3 3/8"x27 7/8" (16x86x707)

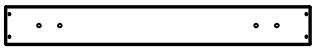

(4) ***M76 - ROCK WALL BOARD - W4L05239***
5/8"x3 3/8"x26 5/8" (16x86x675)

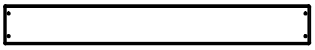

(10) ***M74 - ROCK WALL BOARD - W100987***
5/8"x3 3/8"x26 5/8" (16x86x675)

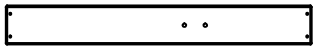

(4) ***M75 - ROCK WALL BOARD - W4L05240***
5/8"x3 3/8"x26 5/8" (16x86x675)

ROCKWALL
STEP 1

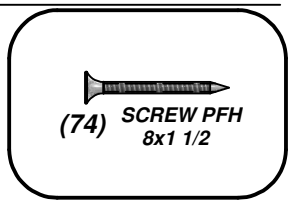

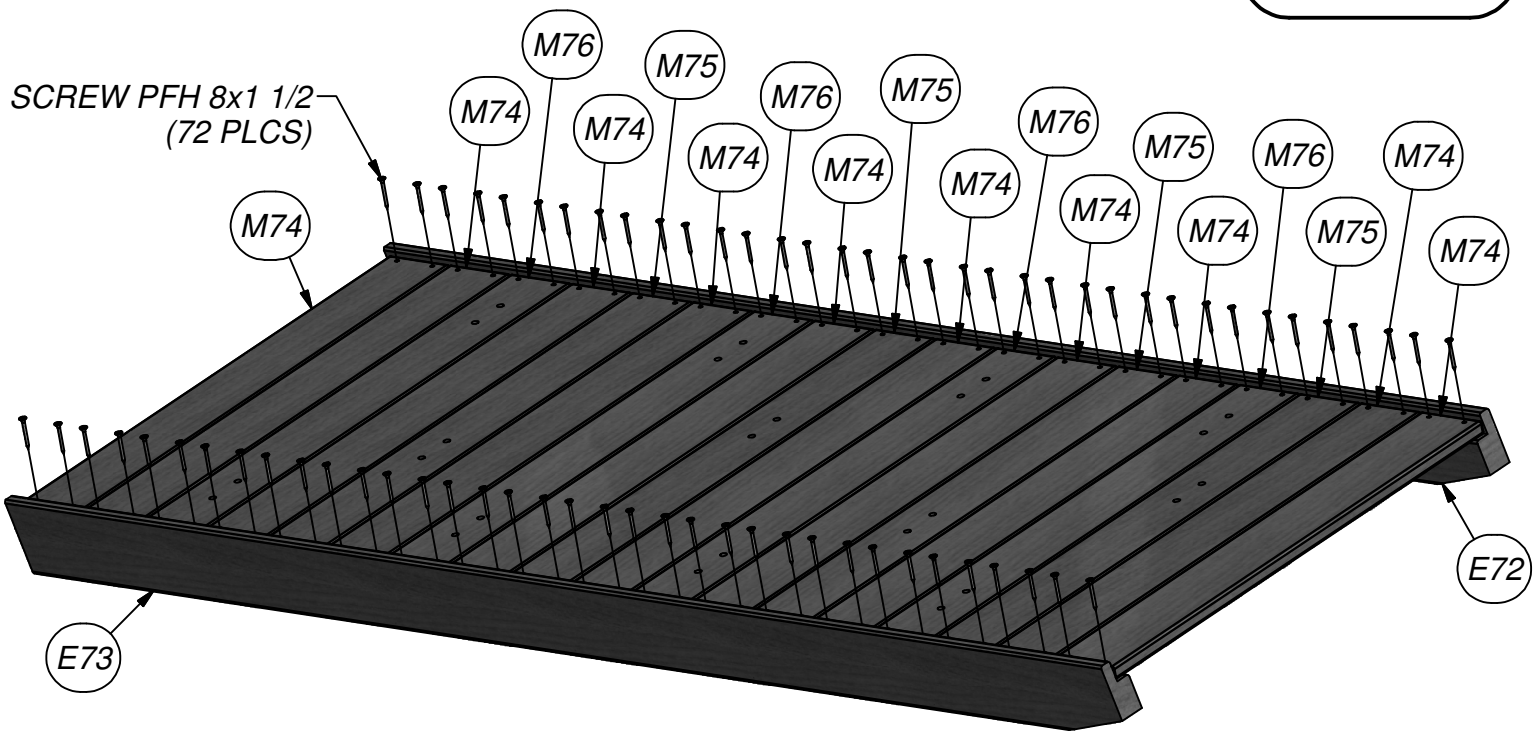

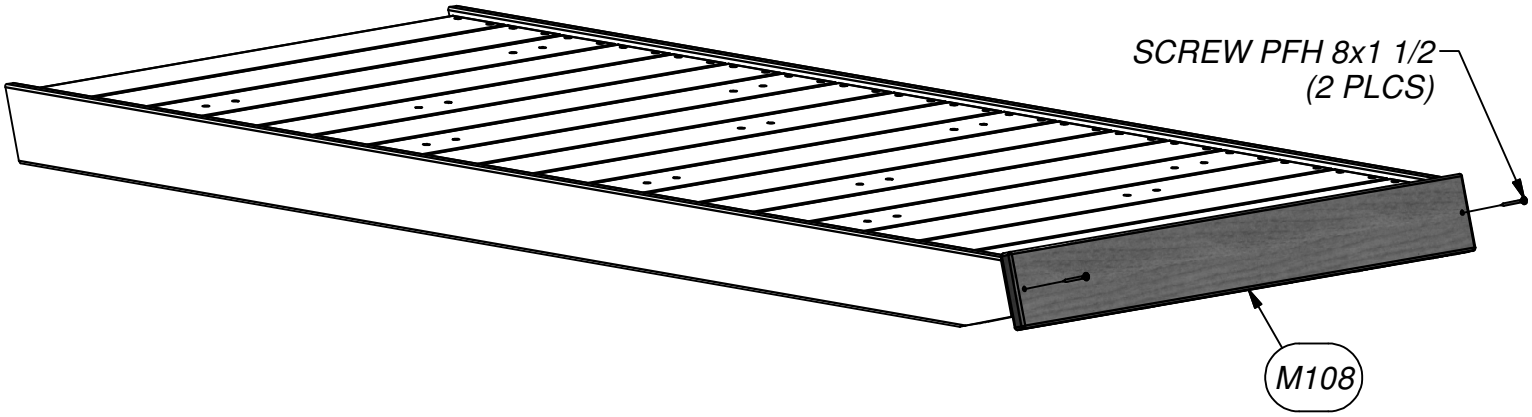

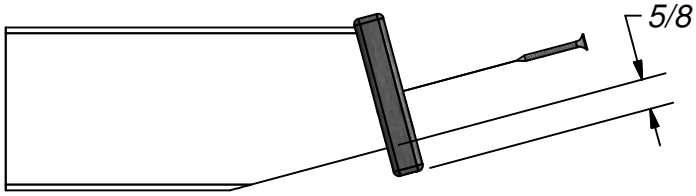

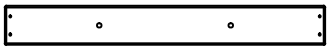

(1) ***M102 - ATTACHMENT BOARD - W4L05242***
5/8"x3 3/8"x27 7/8" (16x86x707)

ROCKWALL
STEP 2

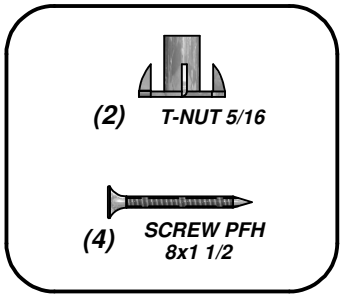

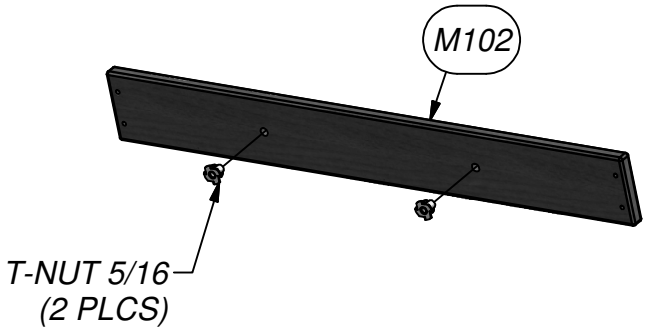

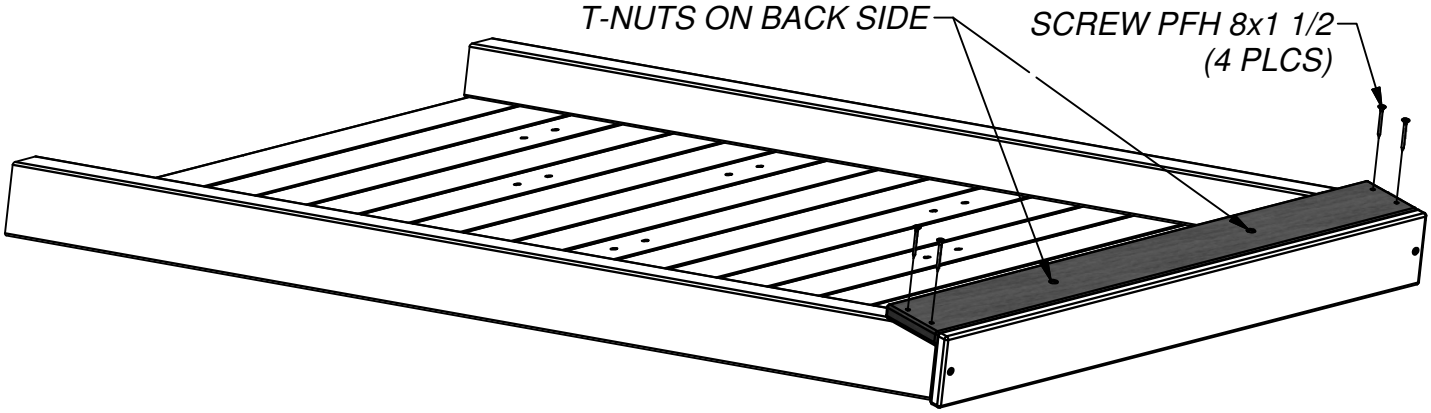

(6) ***- GREEN HC ROCK #2 - A6P00037***

(6) ***- GREEN HC ROCK #1 - A6P00036***

ROCKWALL
STEP 3

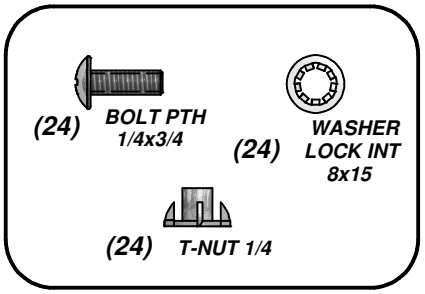

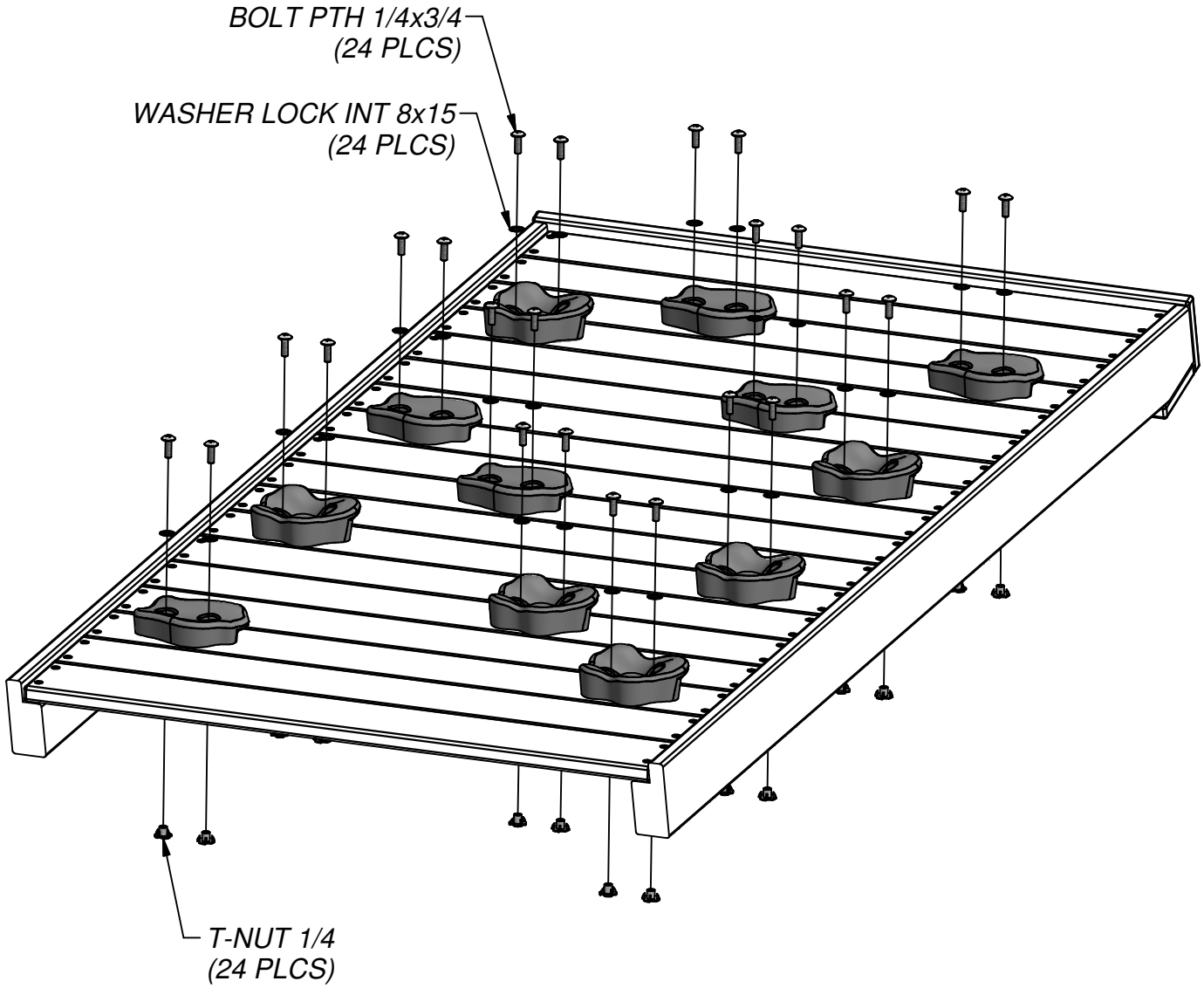

(1) ***A50 - SWING BEAM - W102416***
3 3/8"x5 1/4"x89 1/2" (86x134x2274)

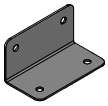

(2) ***GD - L BRACKET 66x66x127 - A100140***

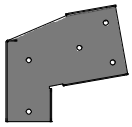

(1) ***TB - SWING BEAM EXTENSION BRACKET-LEFT - A100325***

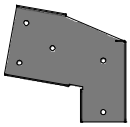

(1) ***TC - SWING BEAM EXTENSION BRACKET-RIGHT - A100326***

SWING BEAM ASSEMBLY
STEP 1

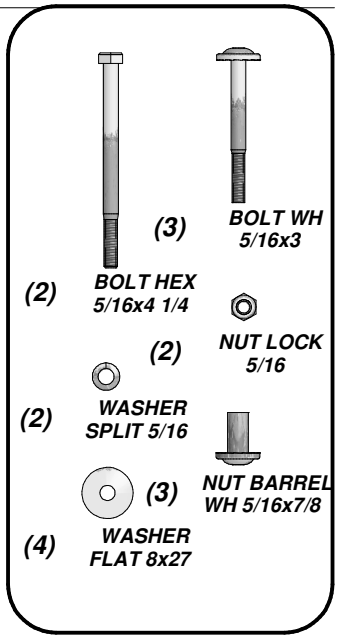

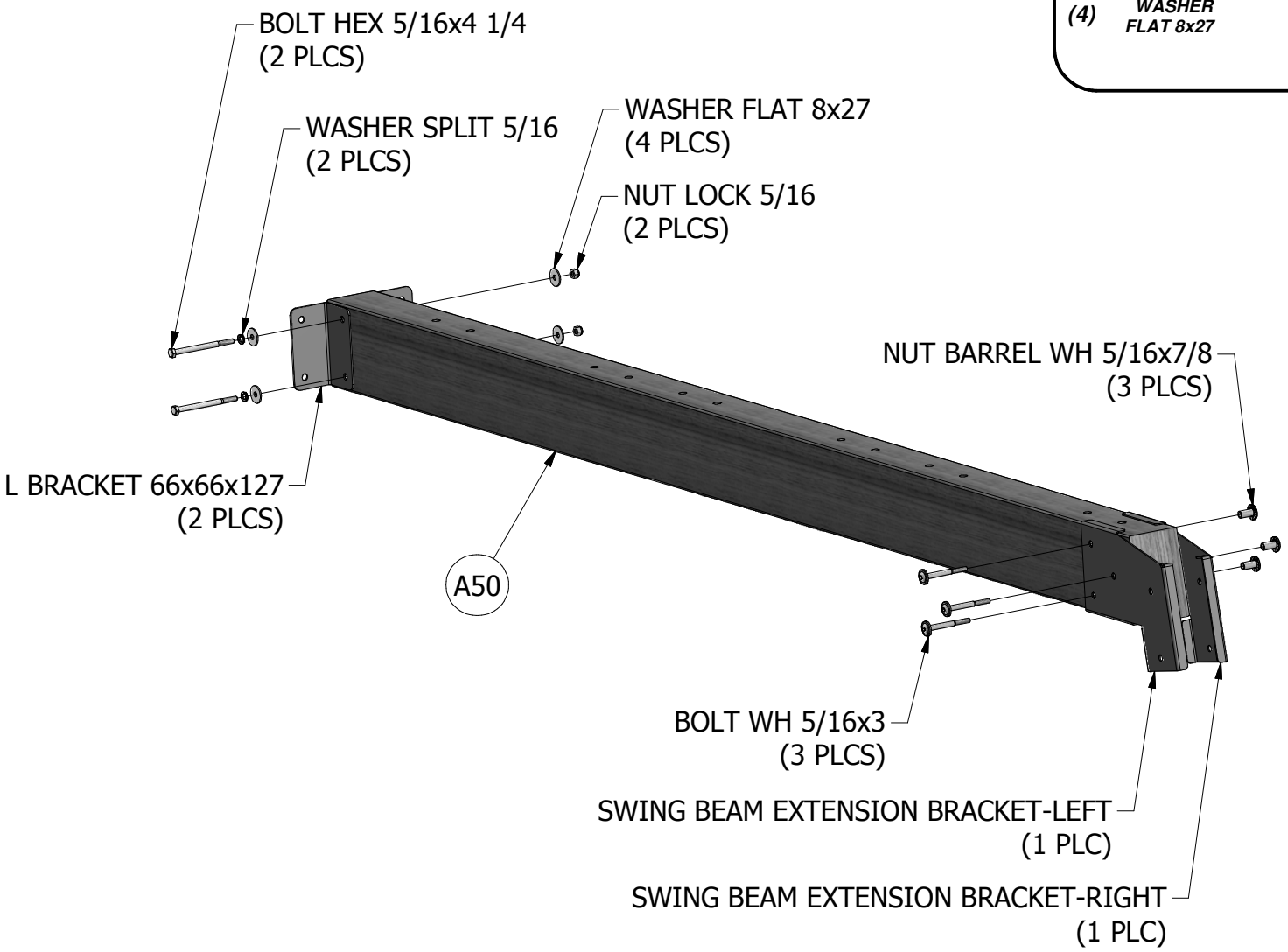

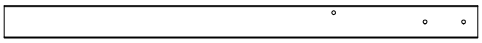

(1) ***SP50 - SWING BEAM SUPPORT - W102417***
3 3/8"x3 3/8"x49 3/8" (86x86x1254)

(2) ***E51 - ANGLE BRACE - W100948***
1 3/8"x3 3/8"x88 3/4" (36x86x2254)

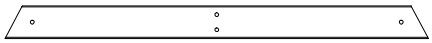

(1) ***E50 - END SUPPORT - W100949***
1 3/8"x3 3/8"x44 1/8" (36x86x1120)

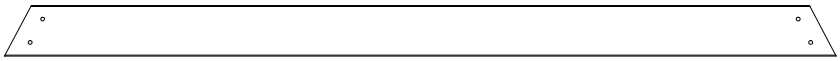

(1) ***G50 - GROUND BOARD - W100947***
1"x5 1/4"x86 3/4" (24x134x2202)

SWING BEAM ASSEMBLY
STEP 2

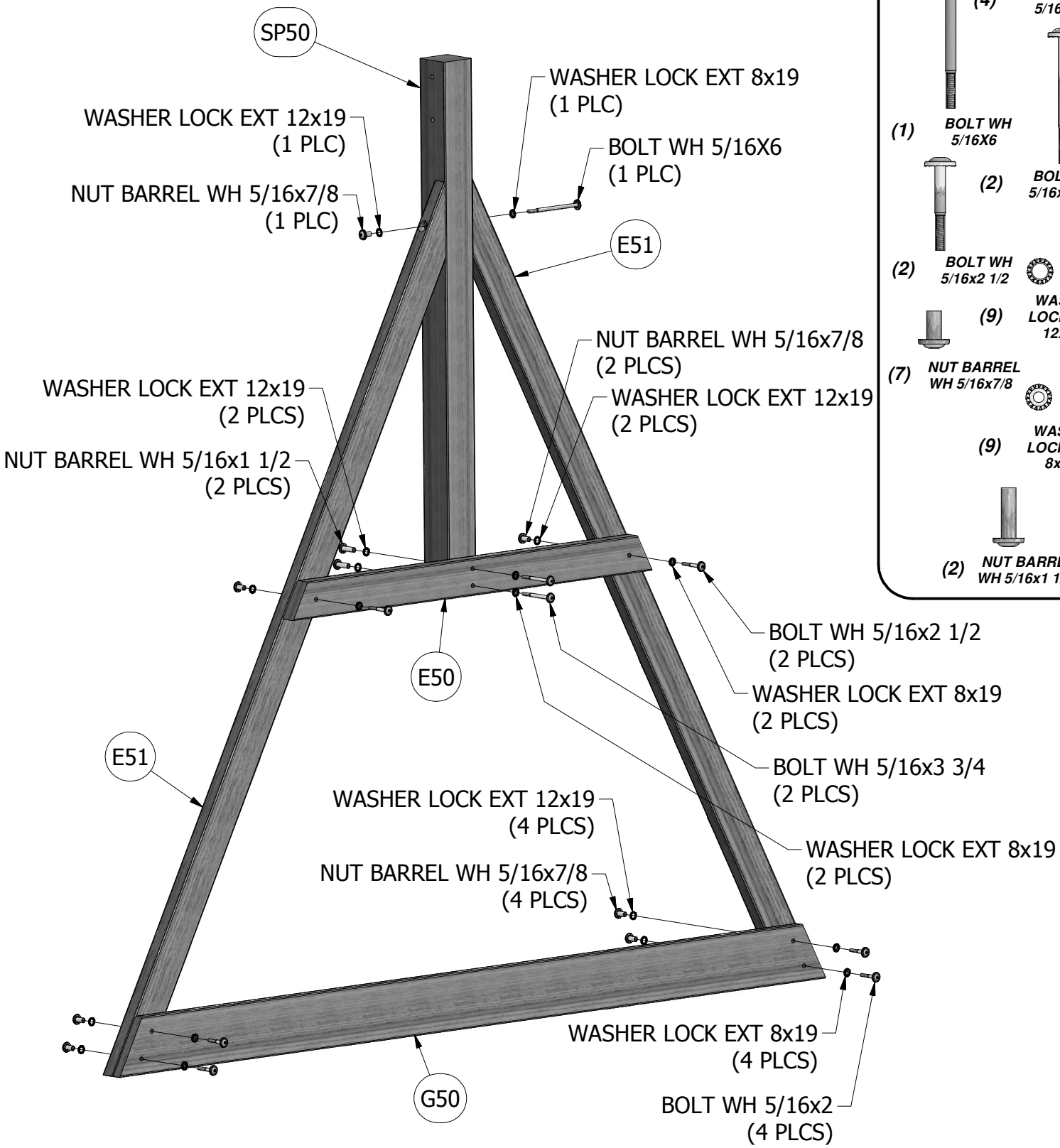

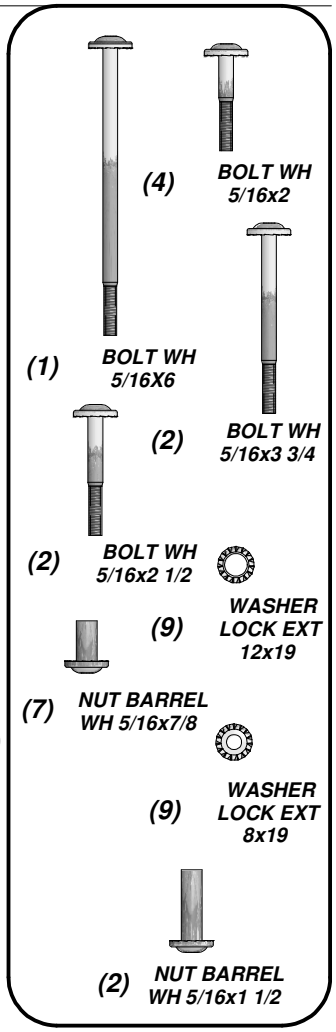

SWING BEAM ASSEMBLY
STEP 3

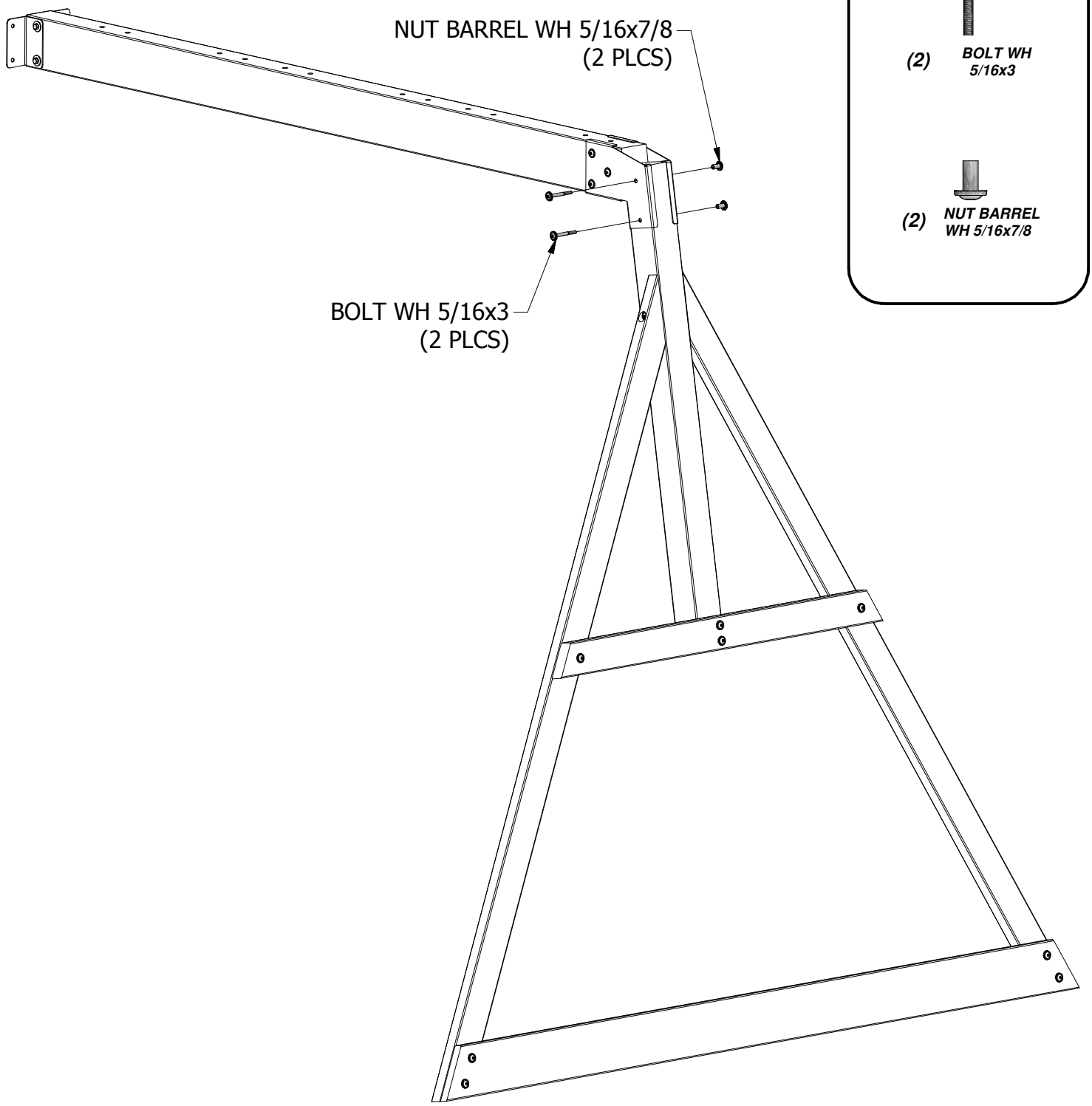

(2) ***BOLT WH 5/16x3***

(2) ***NUT BARREL WH 5/16x7/8***

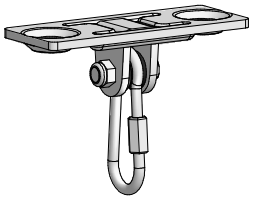

(4) SWING HANGER - A4M00505

SWING BEAM ASSEMBLY
STEP 4

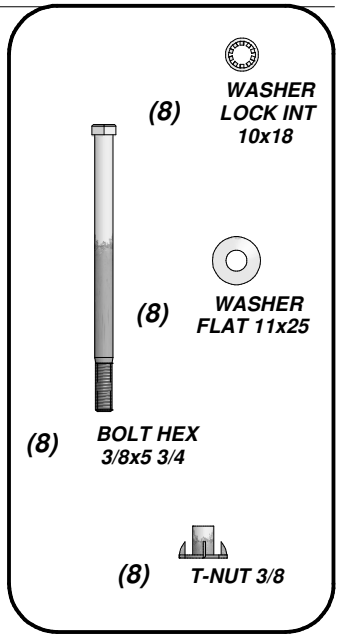

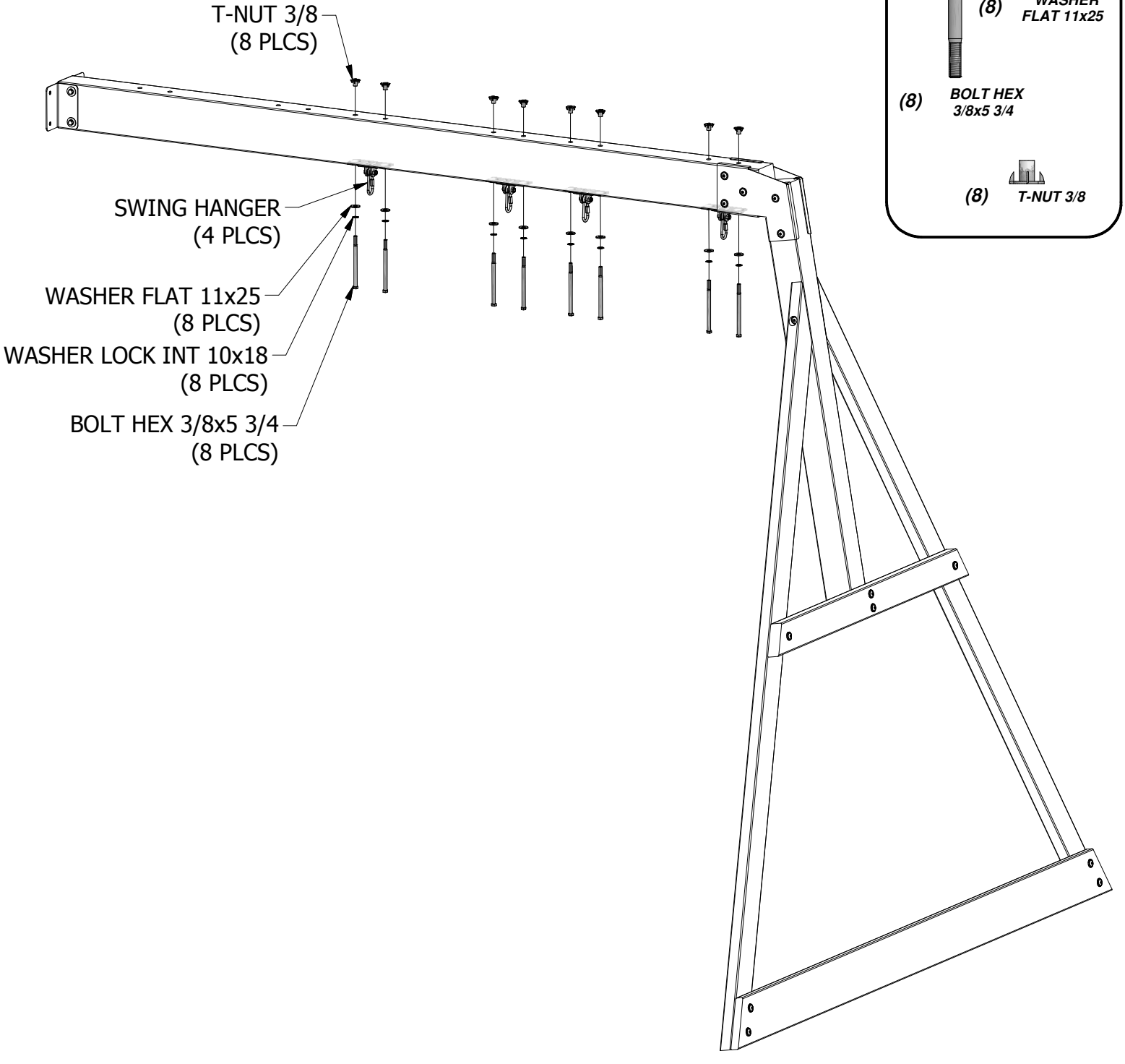

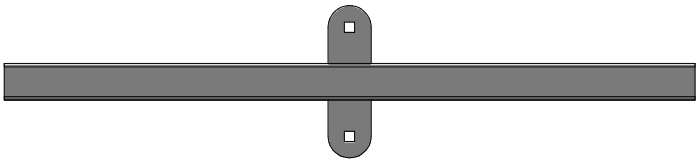

(2) ***EW - GLIDER SUPPORT BYD GREEN - A100065***

(4) ***BY - SWING HANGER QUICK LINK - H100097***

(4) ***EY - TUBING CAP GLIDER SUPPORT - A100067***

(4) ***EX - GLIDER BUSHING BYD GREEN - A100066***

SWING BEAM ASSEMBLY STEP 5

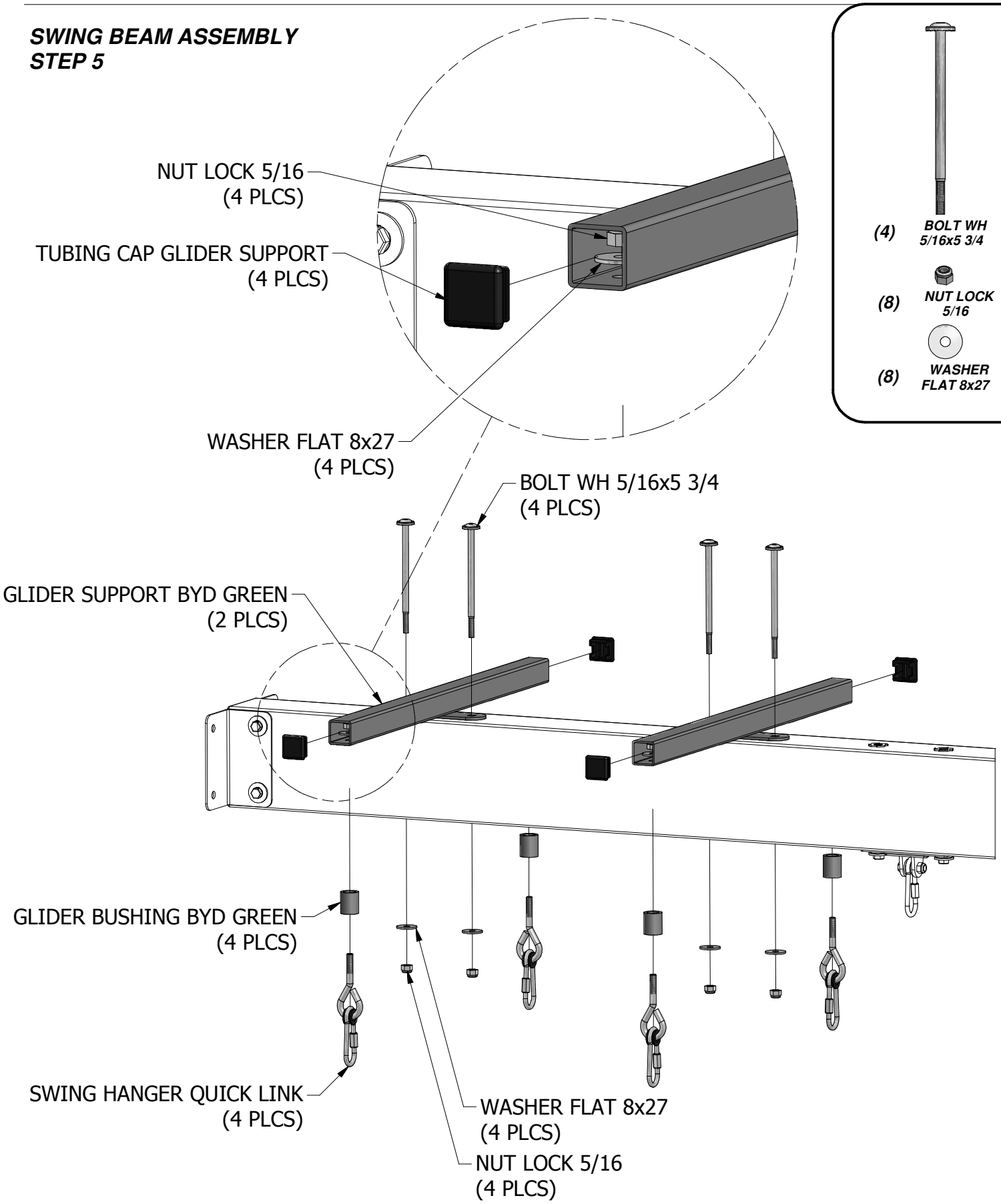

(4) ***FT - CHAIN GREEN 47" - A100096***

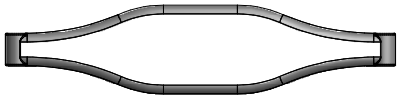

(1) ***DN - GLIDER SEAT DARK GREEN - A100025***

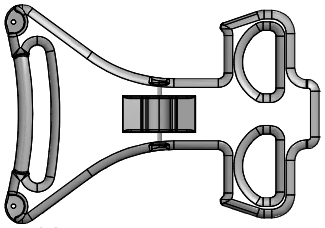

(2) ***DJ - GLIDER ARM LIGHT GREEN - A100021***

(4) ***FA - QUICK LINK - A100069***

GLIDER ASSEMBLY

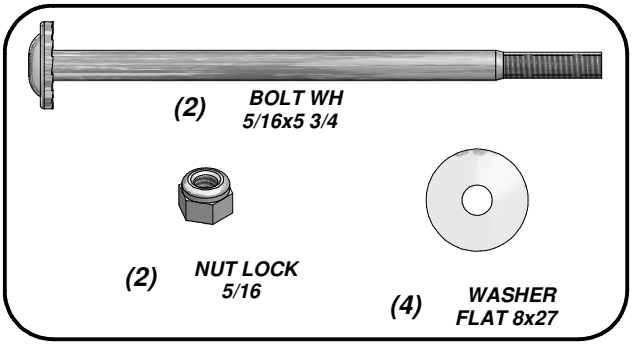

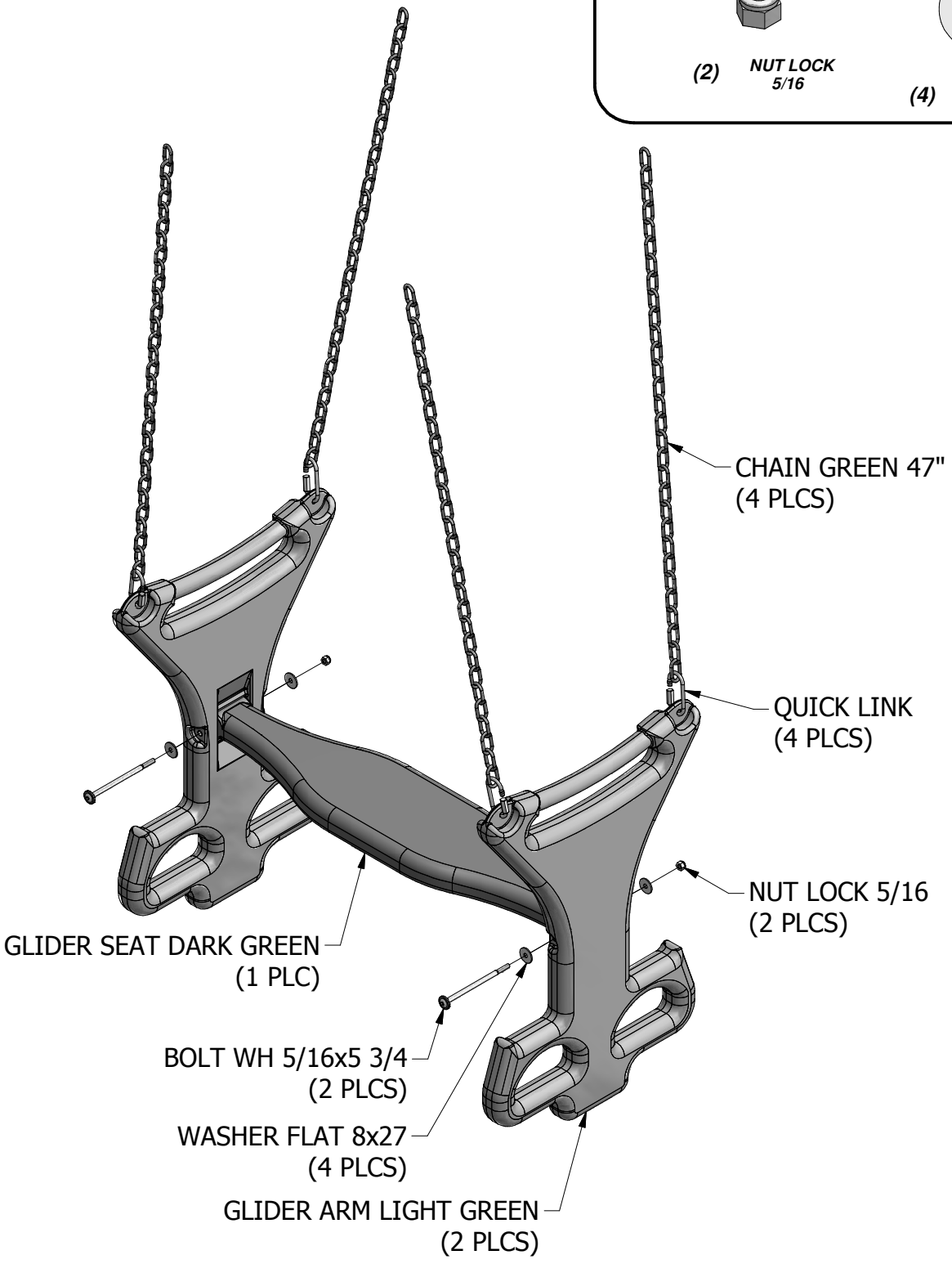

(4) ***EF - CHAIN GREEN 57" - A100047***

(2) ***- SWING SEAT GREEN - A6P00054***

(4) ***FA - QUICK LINK - A100069***

SWING ASSEMBLY

MAKE TWO.

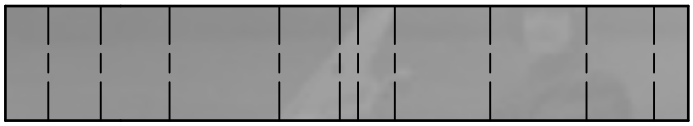

(1) ***DX - SLIDE BED 10' LIGHT GREEN - A100035***

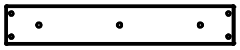

(1) ***M70 - SLIDE BED SUPPORT - W100935***
5/8"x3 3/8"x19 7/8" (16x86x505)

10 FOOT SLIDE ASSEMBLY

STEP 1

(3) ***BOLT WH 5/16x1/2***

(3) ***T-NUT 5/16***

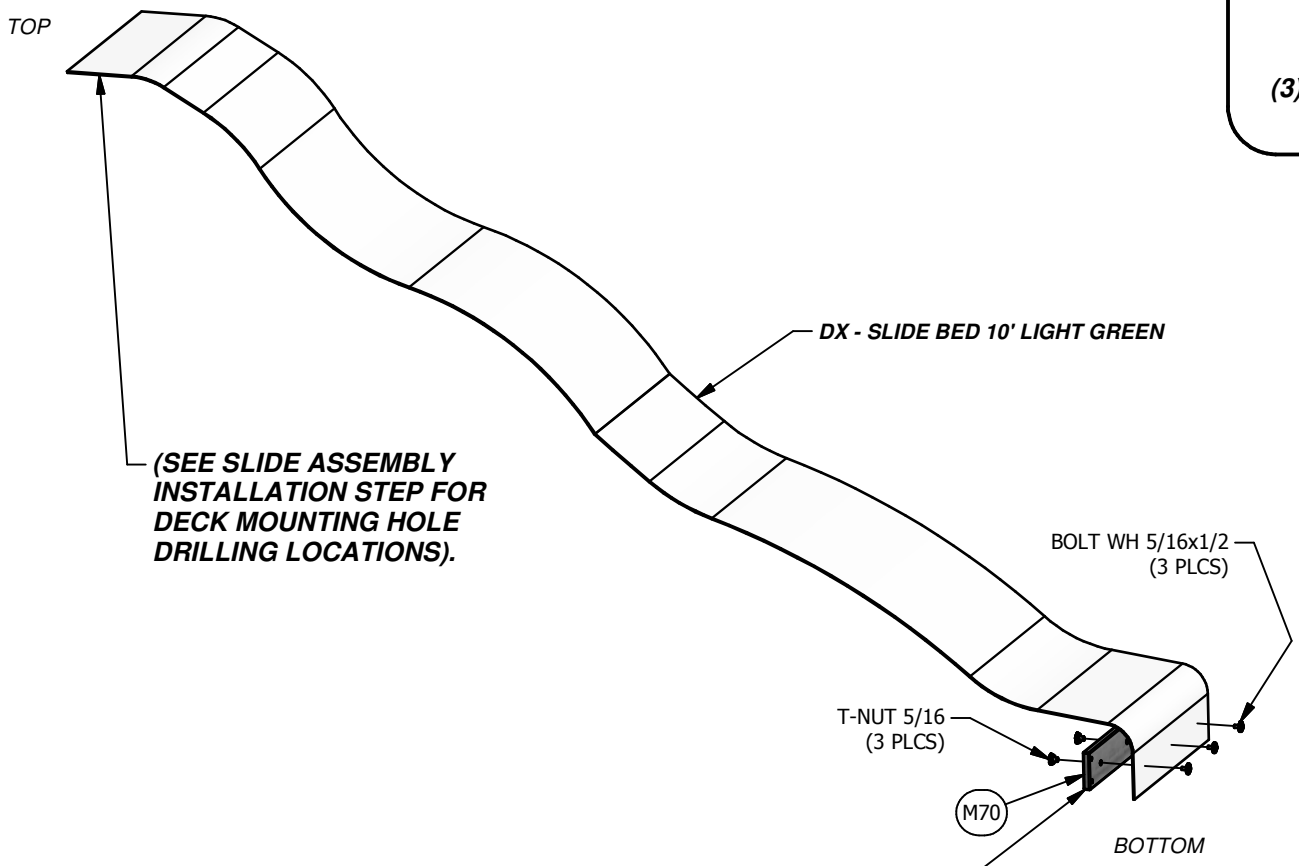

USE M70 SLIDE BED SUPPORT AS A TEMPLATE FOR DRILLING BOTTOM HOLE PATTERN IN SLIDE BED. BE SURE TO PLACE SLIDE BRACE UP 1/2" FROM BOTTOM EDGE OF SLIDE BED BEFORE MARKING HOLE PATTERN. USE A 3/8" DRILL BIT TO DRILL HOLE PATTERN.

TIP: PREBENDING THE ENDS WILL EASE ASSEMBLY.

(1) ***DS - SLIDE RAIL 10' BOTTOM RIGHT GREEN - A100031***

(1) ***TR - SLIDE RAIL 10' TOP RIGHT GREEN - A100033***

(1) ***DR - SLIDE RAIL 10' BOTTOM LEFT GREEN - A100030***

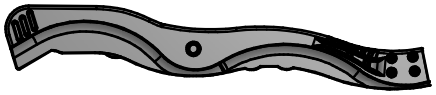

(1) ***DT - SLIDE RAIL 10' TOP LEFT GREEN - A100032***

10 FOOT SLIDE ASSEMBLY

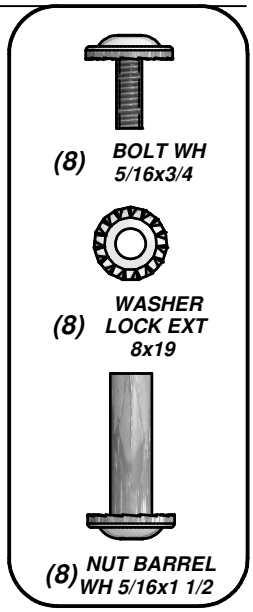

STEP 2

- *REPEAT ON OTHER SIDE, MAKING A LEFT AND RIGHT ASSEMBLY.*

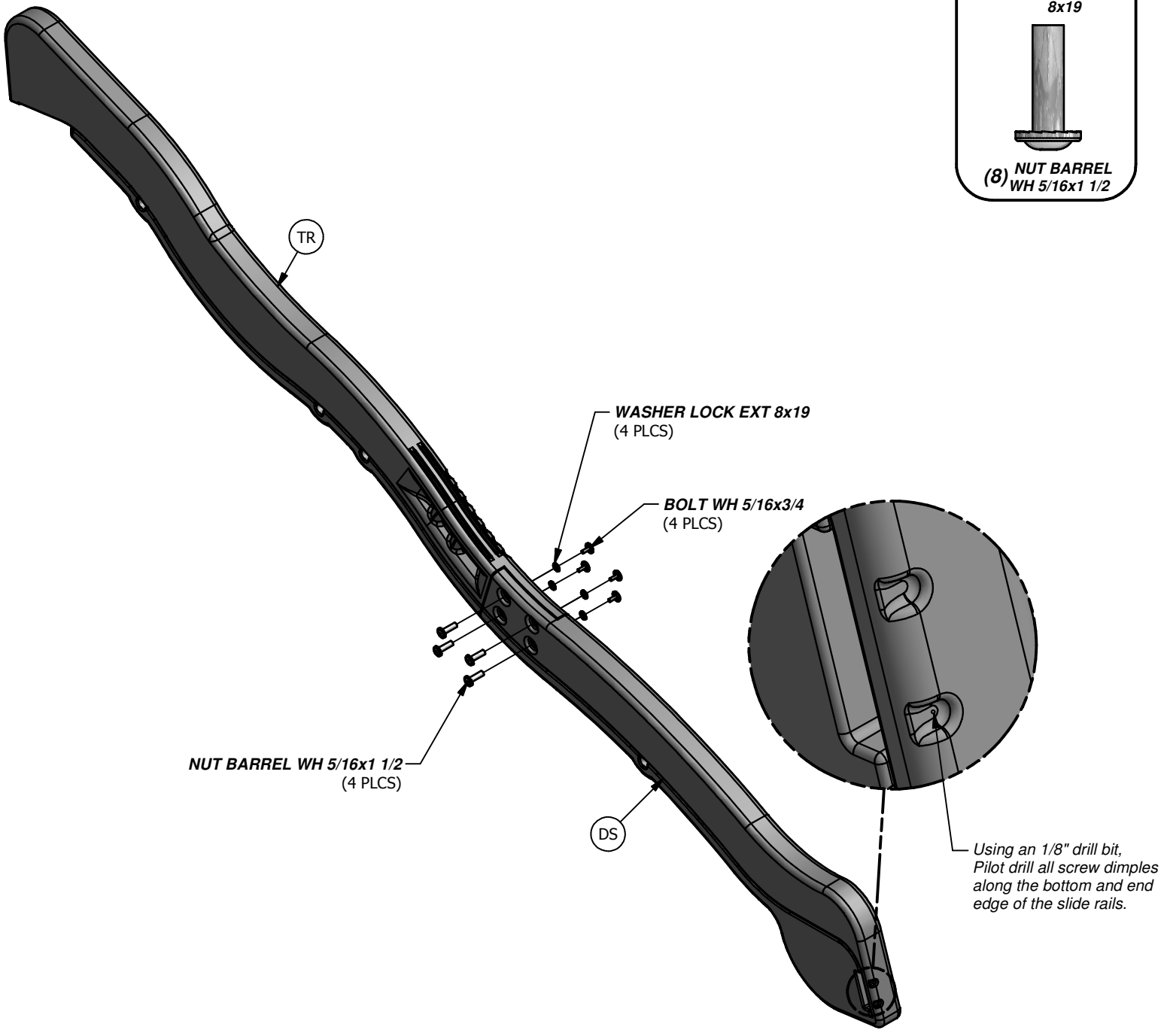

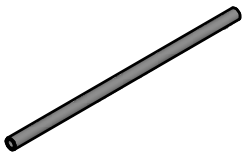

(4) ***DW - SLIDE SUPPORT TUBE 21.34x505 - A100034***
21.34 OD x 2.77 W x 505

10 FOOT SLIDE ASSEMBLY

STEP 3

• PLACE (1) SLIDE RAIL ASSEMBLY ON A FLAT SURFACE AND BEGIN INSERTING SLIDE BED AT THE BOTTOM OF THE SLIDE RAIL (FIG. 1). HAVE A HELPER BEND THE SLIDE BED TOWARDS THE TOP OF THE SLIDE AND INSERT THE BED INTO THE SLIDE CAVITY. MAKE SURE SLIDE BED IS COMPLETELY DOWN IN THE SLIDE CAVITY.

• INSTALL THE (4) SLIDE SUPPORT TUBES INTO THEIR RESPECTIVE PILOT LOCATIONS (FIG. 2).

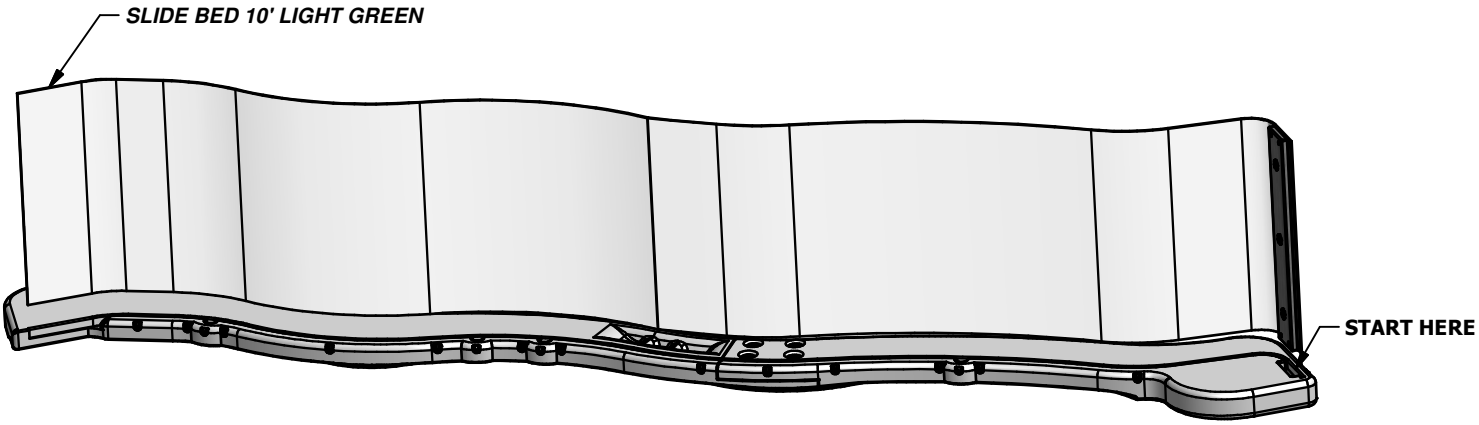

(FIG. 1)

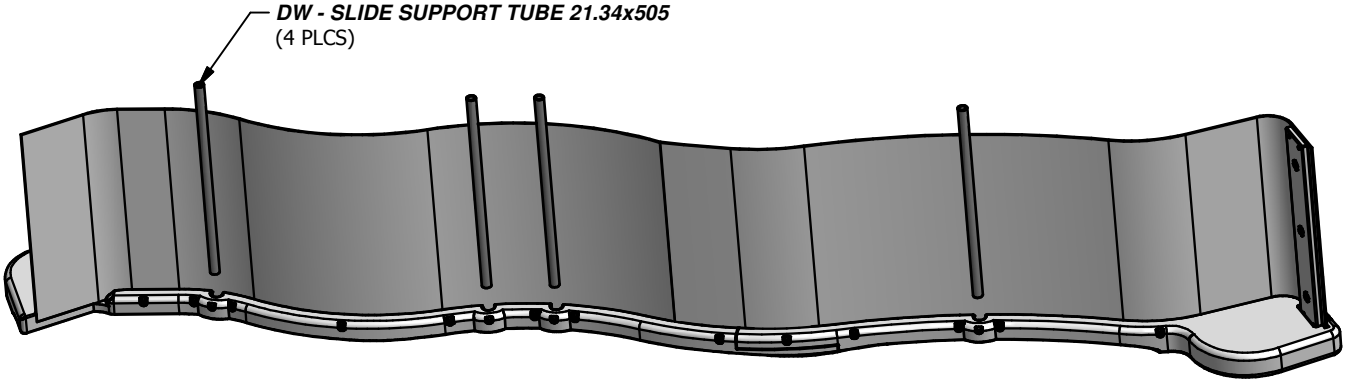

(FIG. 2)

10 FOOT SLIDE ASSEMBLY

STEP 4

- *ONCE THE SLIDE BED, SUPPORT TUBES, AND SUPPORT BOARD ARE COMPLETELY IN THE CAVITY AND SUPPORT POCKET, SECURE USING 3" SCREWS AT EACH OF THE PILOT HOLE LOCATIONS AS SHOWN.*
- *REPEAT PROCESS FOR OPPOSITE SLIDE RAIL.*

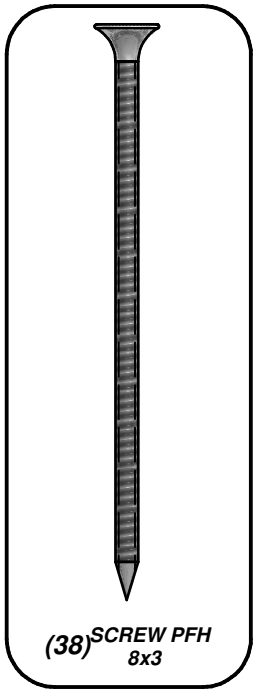

(38) ***SCREW PFH 8x3***

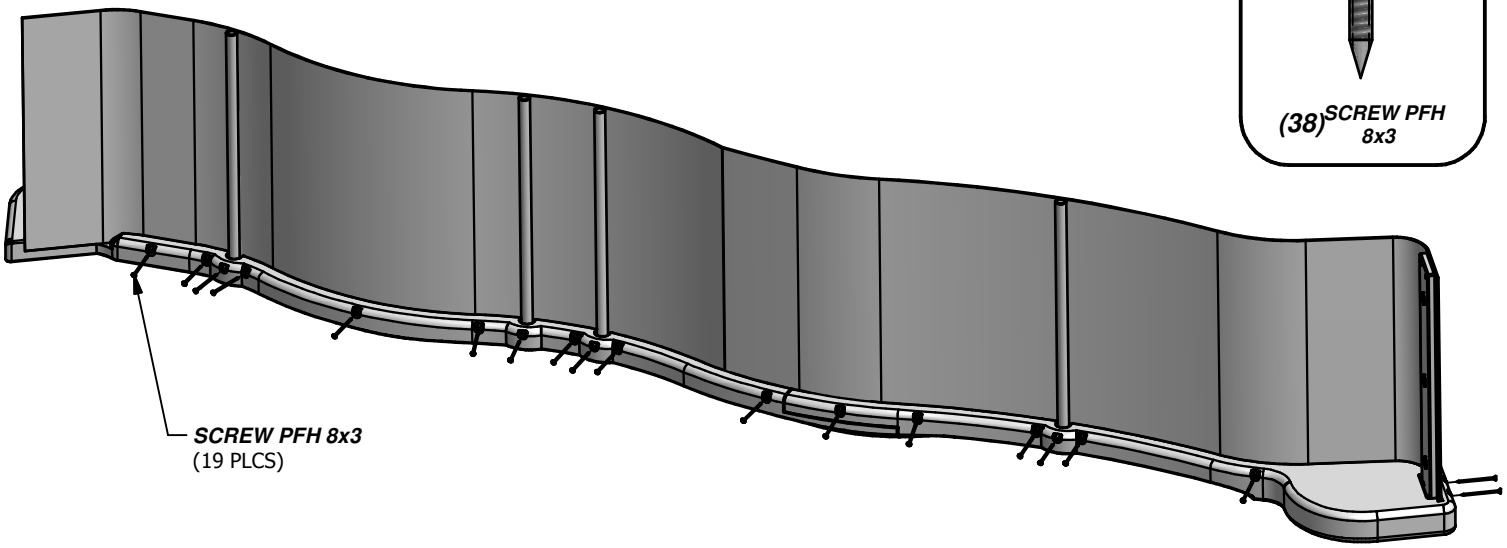

SCREW PFH 8x3
(19 PLCS)

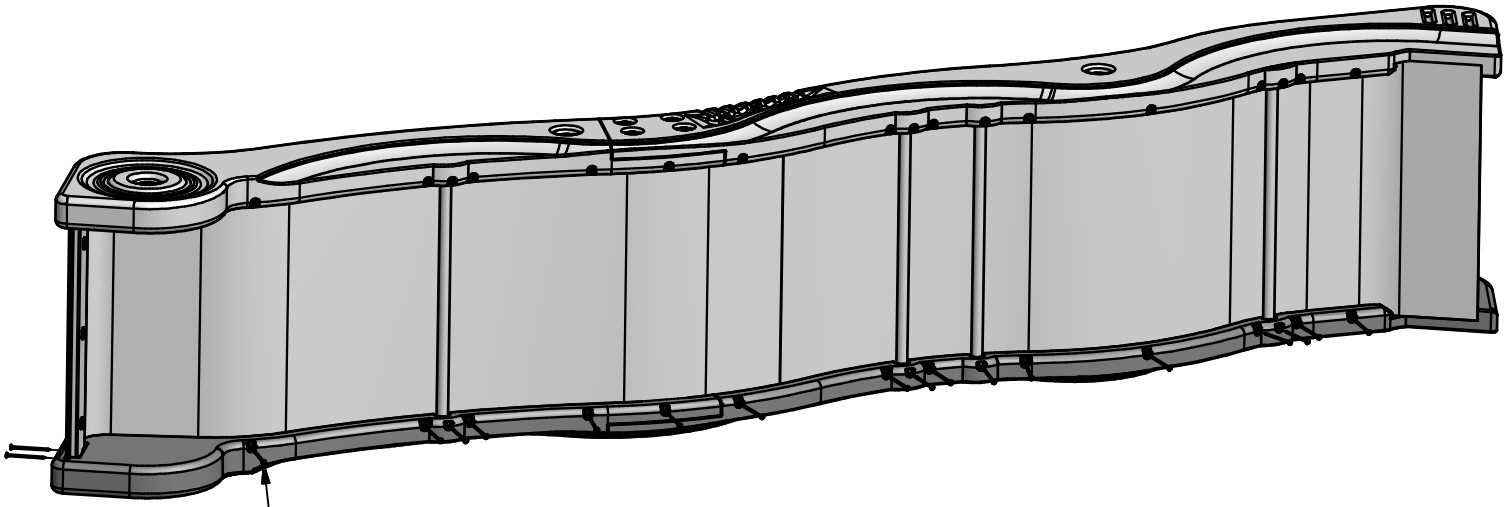

SCREW PFH 8x3
(19 PLCS)

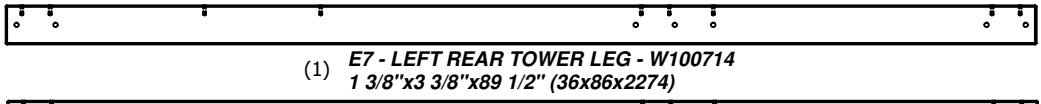

(1) ***E7 - LEFT REAR TOWER LEG - W100714***
1 3/8"x3 3/8"x89 1/2" (36x86x2274)

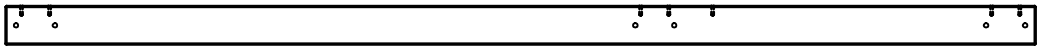

(1) ***E3 - LEFT FRONT TOWER LEG - W4L05381***
1 3/8"x3 3/8"x89 1/2" (36x86x2274)

(1) ***G4 - FLOOR RAIL - W4L05402***
5/8"x5 1/4"x49" (16x134x1244)

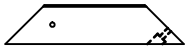

(2) ***E4 - DECK BRACE - W100615***
1 3/8"x3 3/8"x15 1/2" (36x86x394)

(1) ***G8 - WALL RAIL - W100624***
1"x5 1/4"x49" (24x134x1244)

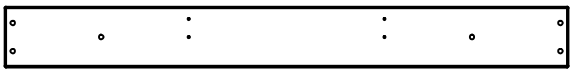

(1) ***K3 - FLOOR RAIL - W4L05404***
5/8"x5 1/4"x49" (16x134x1244)

STEP 1

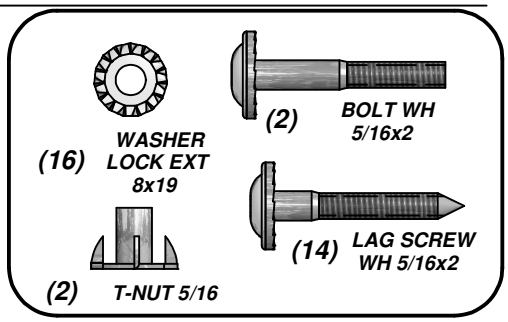

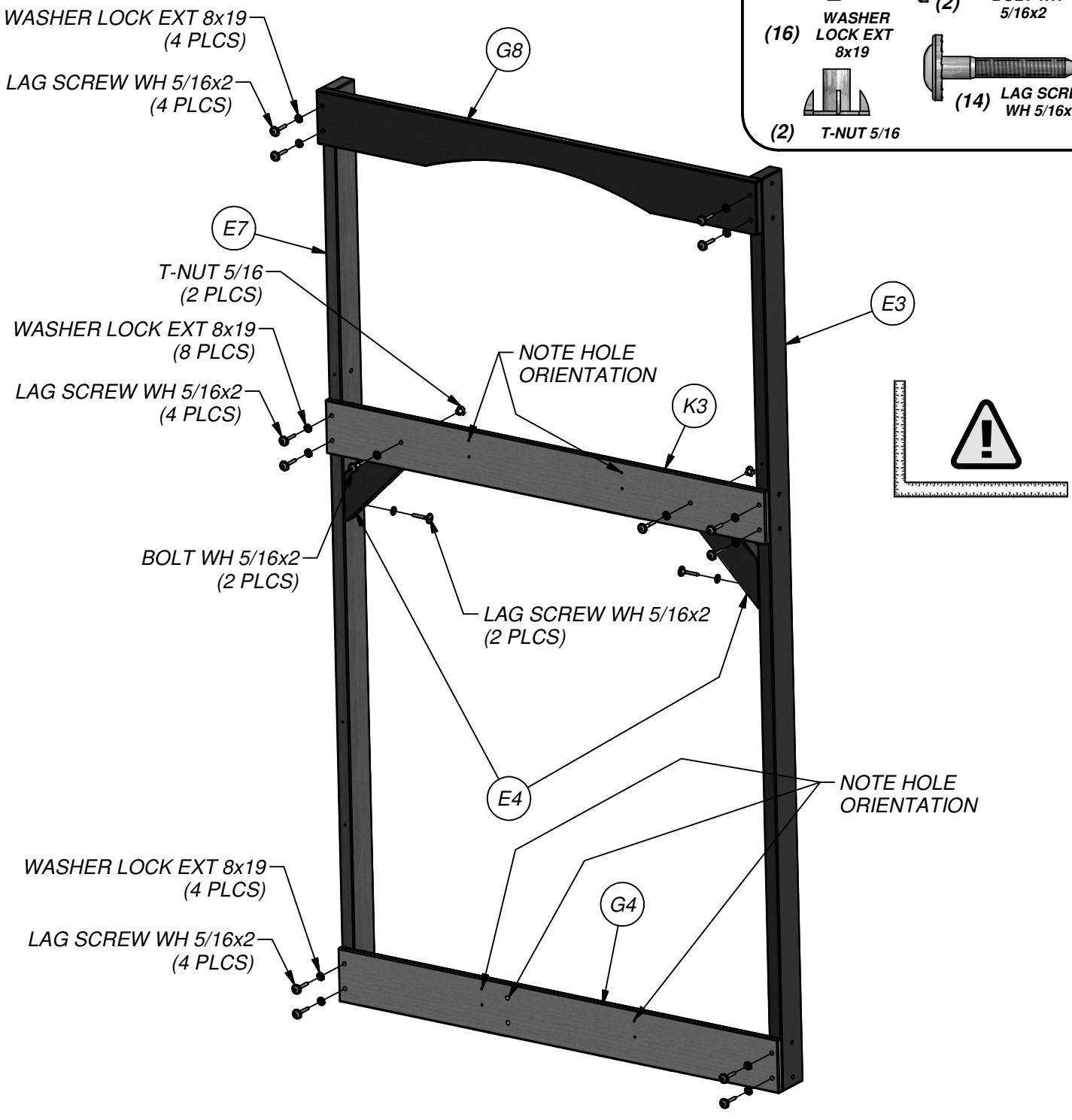

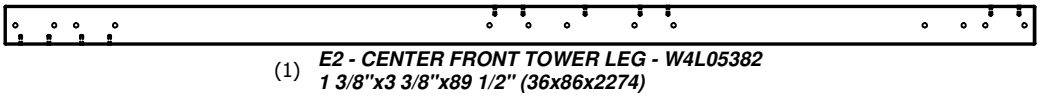

(1) **E2 - CENTER FRONT TOWER LEG - W4L05382**
1 3/8"x3 3/8"x89 1/2" (36x86x2274)

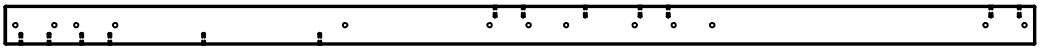

(1) **E6 - CENTER REAR TOWER LEG - W4L05379**
1 3/8"x3 3/8"x89 1/2" (36x86x2274)

(1) **G4 - FLOOR RAIL - W4L05402**
5/8"x5 1/4"x49" (16x134x1244)

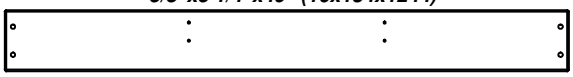

(2) **G7 - FLOOR RAIL - W100623**
1"x5 1/4"x49" (24x134x1244)

(1) **K2 - BASE/SAND BOX BOARD - W4L05398**
5/8"x5 1/4"x49" (16x134x1244)

(1) **G8 - WALL RAIL - W100624**
1"x5 1/4"x49" (24x134x1244)

STEP 2

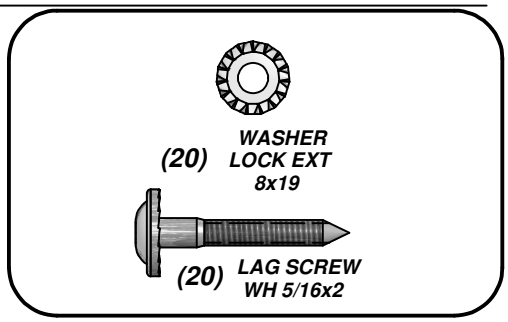

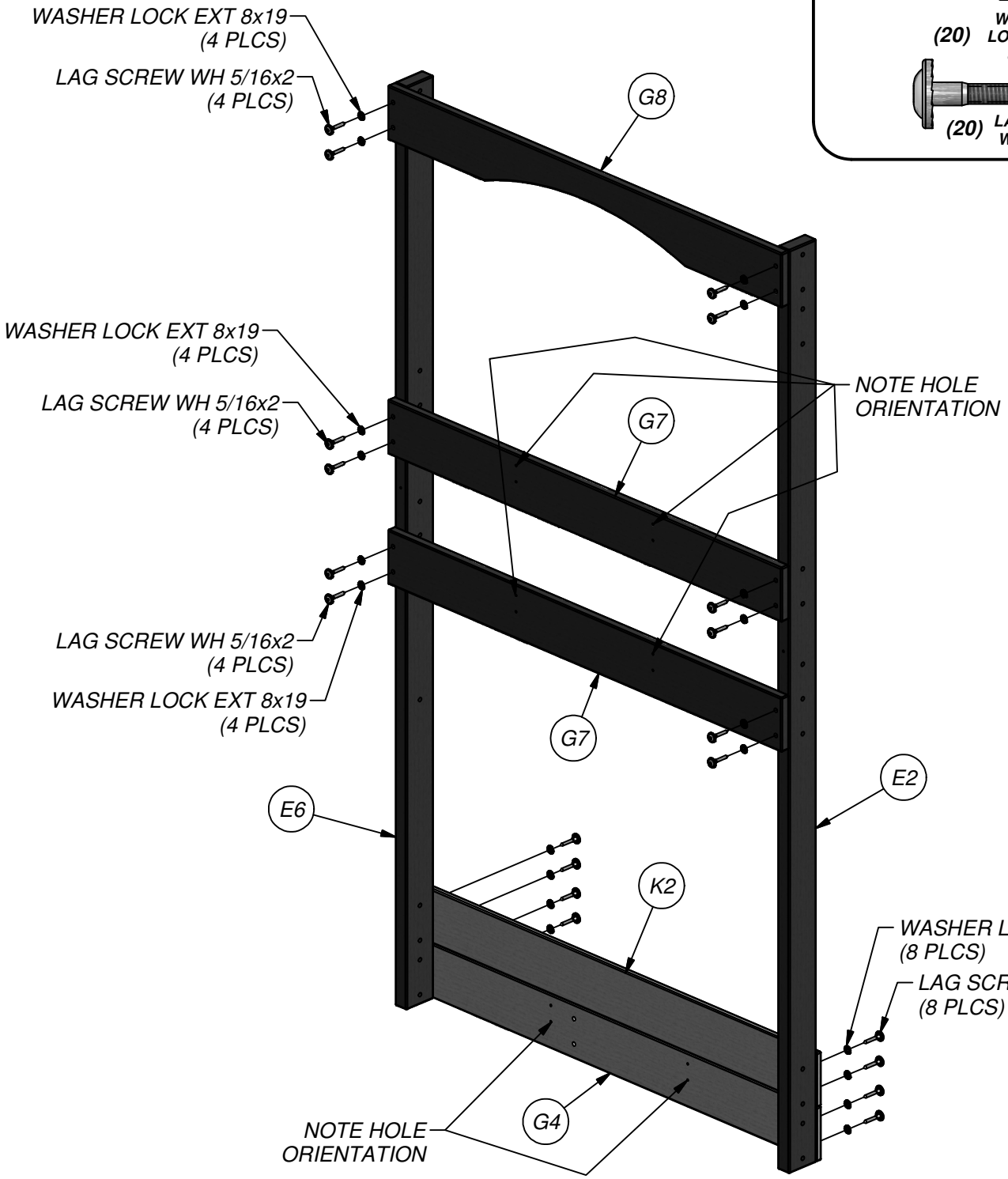

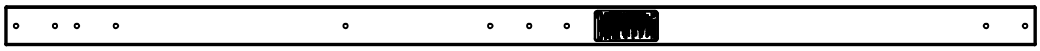

(1) ***E5 - RIGHT REAR TOWER LEG - W2A01691***
1 3/8"x3 3/8"x89 1/2" (36x86x2274)

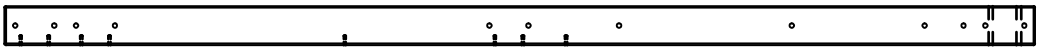

(1) ***E1 - RIGHT FRONT TOWER LEG - W4L05380***
1 3/8"x3 3/8"x89 1/2" (36x86x2274)

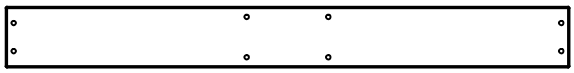

(1) ***G5 - WALL RAIL/SWING MOUNT - W100621***
1"x5 1/4"x49" (24x134x1244)

(1) ***G6 - FLOOR RAIL - W100622***
1"x5 1/4"x49" (24x134x1244)

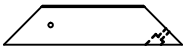

(2) ***E4 - DECK BRACE - W100615***
1 3/8"x3 3/8"x15 1/2" (36x86x394)

(2) ***K2 - BASE/SAND BOX BOARD - W4L05398***
5/8"x5 1/4"x49" (16x134x1244)

(1) ***M5 - WALL RAIL - W100647***
5/8"x3 3/8"x49" (16x86x1244)

STEP 3

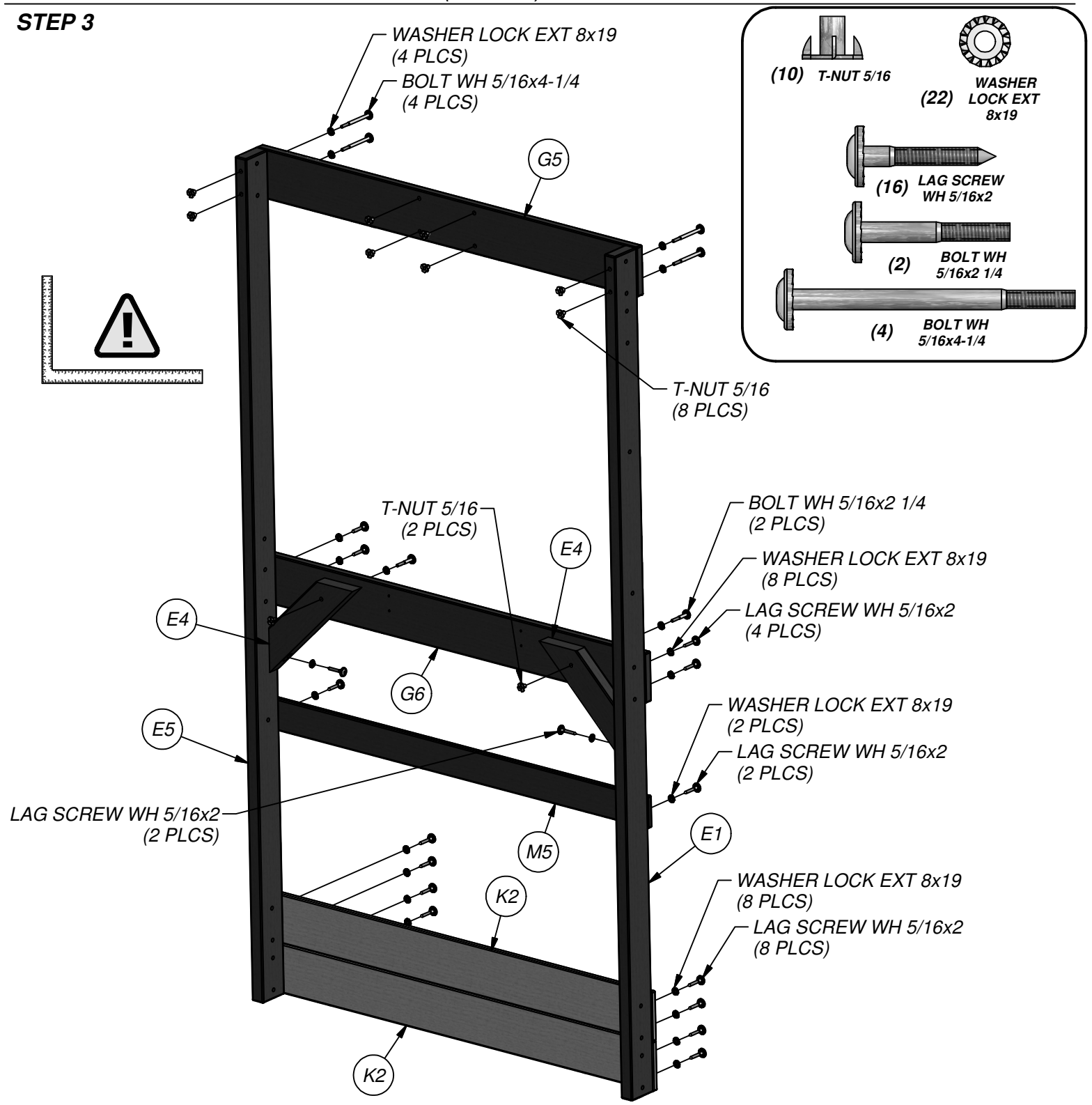

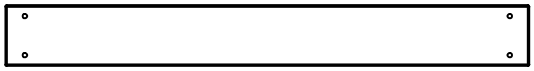

(2) ***K5 - GROUND BOARD - W4L05397***
5/8"x5 1/4"x45 1/2" (16x134x1156)

(2) ***G1 - BASE BOARD - W4L05396***
5/8"x5 1/4"x82 1/4" (16x134x2088)

(4) ***H10 - BOTTOM FLOOR BOARD SUPPORT - W100677***
1"x3 3/8"x5 1/4" (24x86x134)

STEP 4

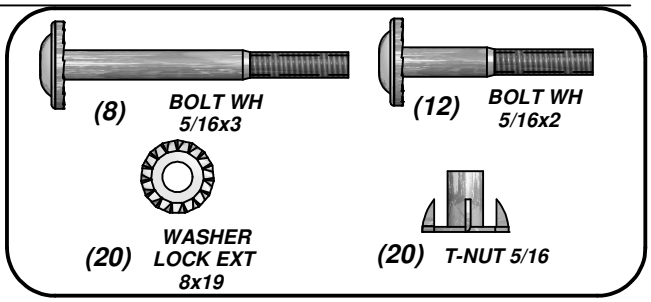

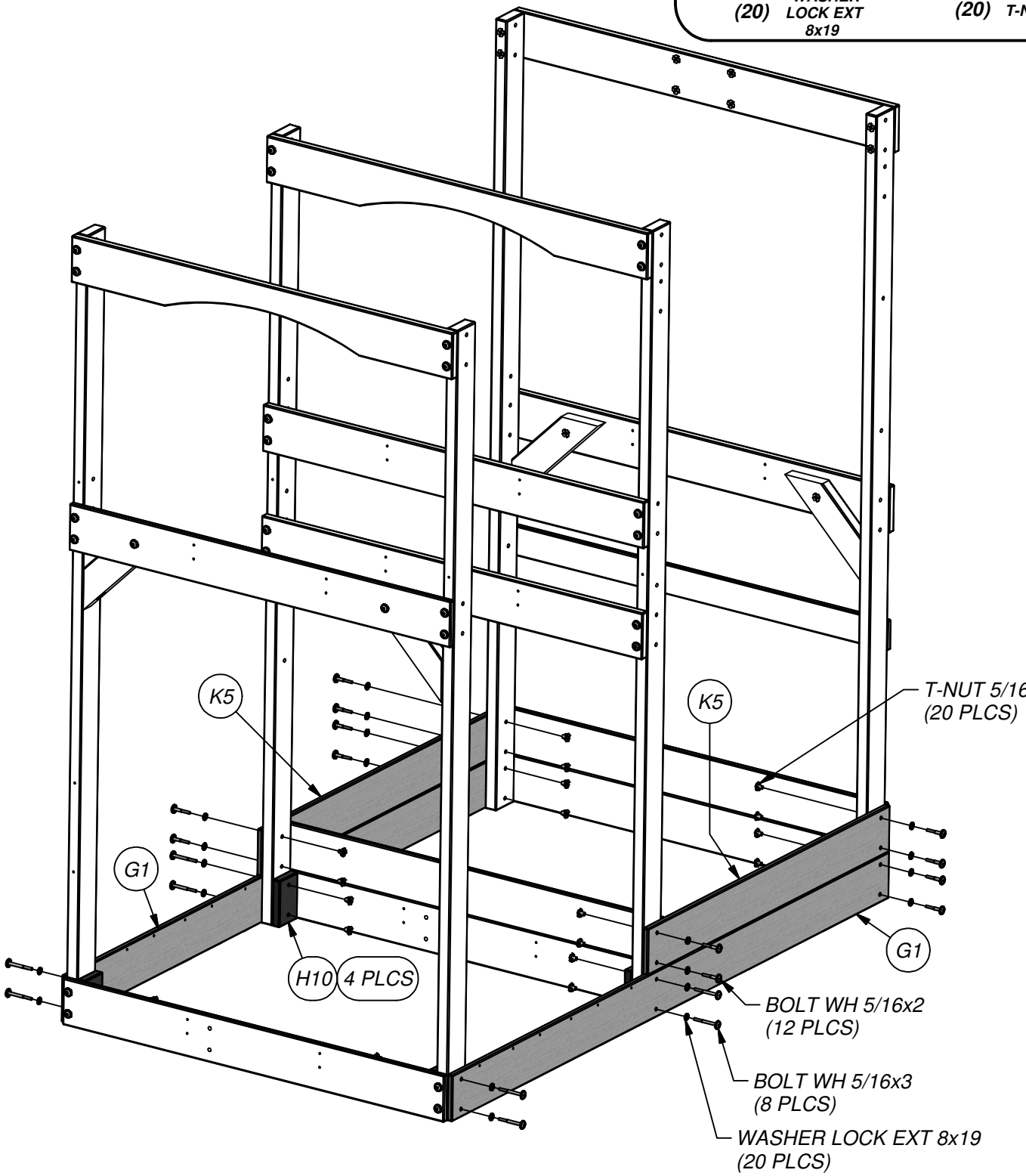

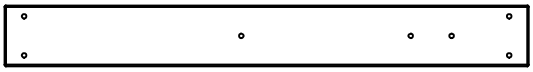

(1) ***G15 - FLOOR RAIL - W100793***
1"x5 1/4"x45 1/2" (24x134x1156)

(6) ***H10 - BOTTOM FLOOR BOARD SUPPORT - W100677***
1"x3 3/8"x5 1/4" (24x86x134)

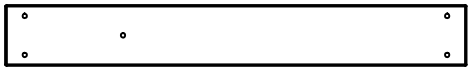

(2) ***G12 - FLOOR RAIL - W4L05377***
1"x5 1/4"x40 1/8" (24x134x1018)

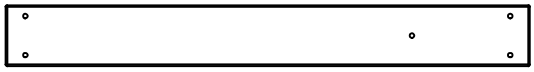

(1) ***G10 - FLOOR RAIL - W100626***
1"x5 1/4"x45 1/2" (24x134x1156)

STEP 5

(12) ***BOLT WH***
5/16x3 1/4

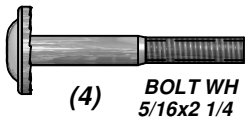

(4) ***BOLT WH***
5/16x2 1/4

(16) ***WASHER***
LOCK EXT
8x19

(16) ***T-NUT 5/16***

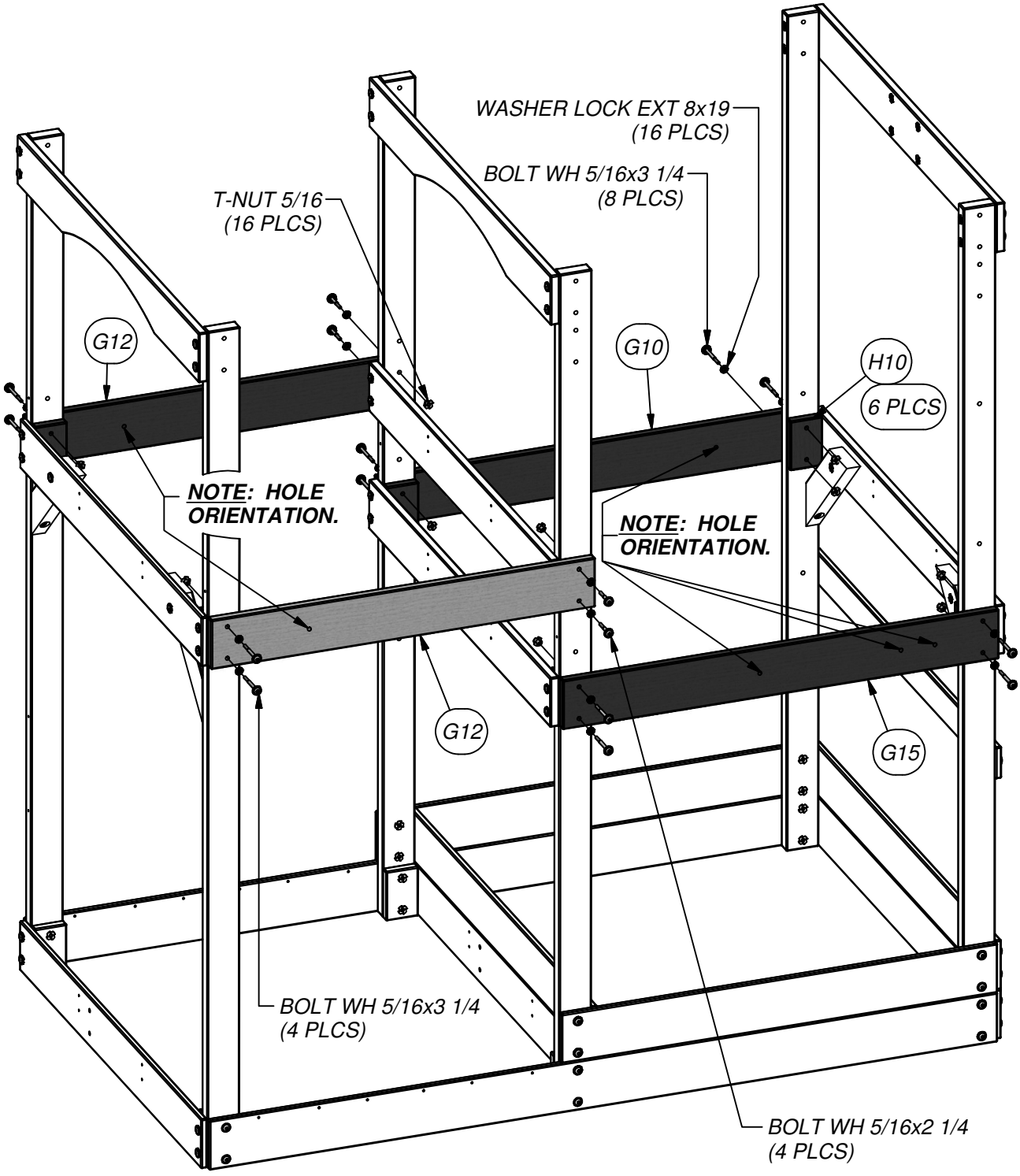

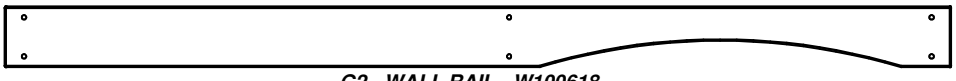

(1) ***G2 - WALL RAIL - W100618***
1"x5 1/4"x82 1/4" (24x134x2088)

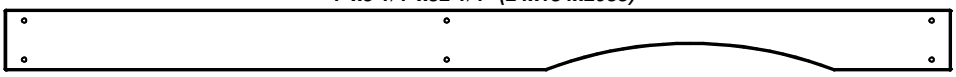

(1) ***G3 - WALL RAIL - W100619***
1"x5 1/4"x82 1/4" (24x134x2088)

(1) ***K1 - WALL RAIL - W100639***
5/8"x5 1/4"x45 1/2" (16x134x1156)

STEP 6

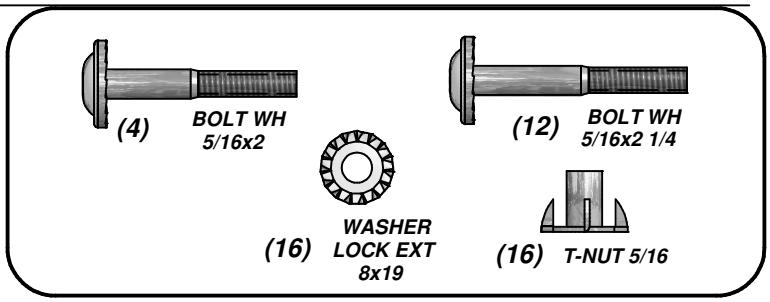

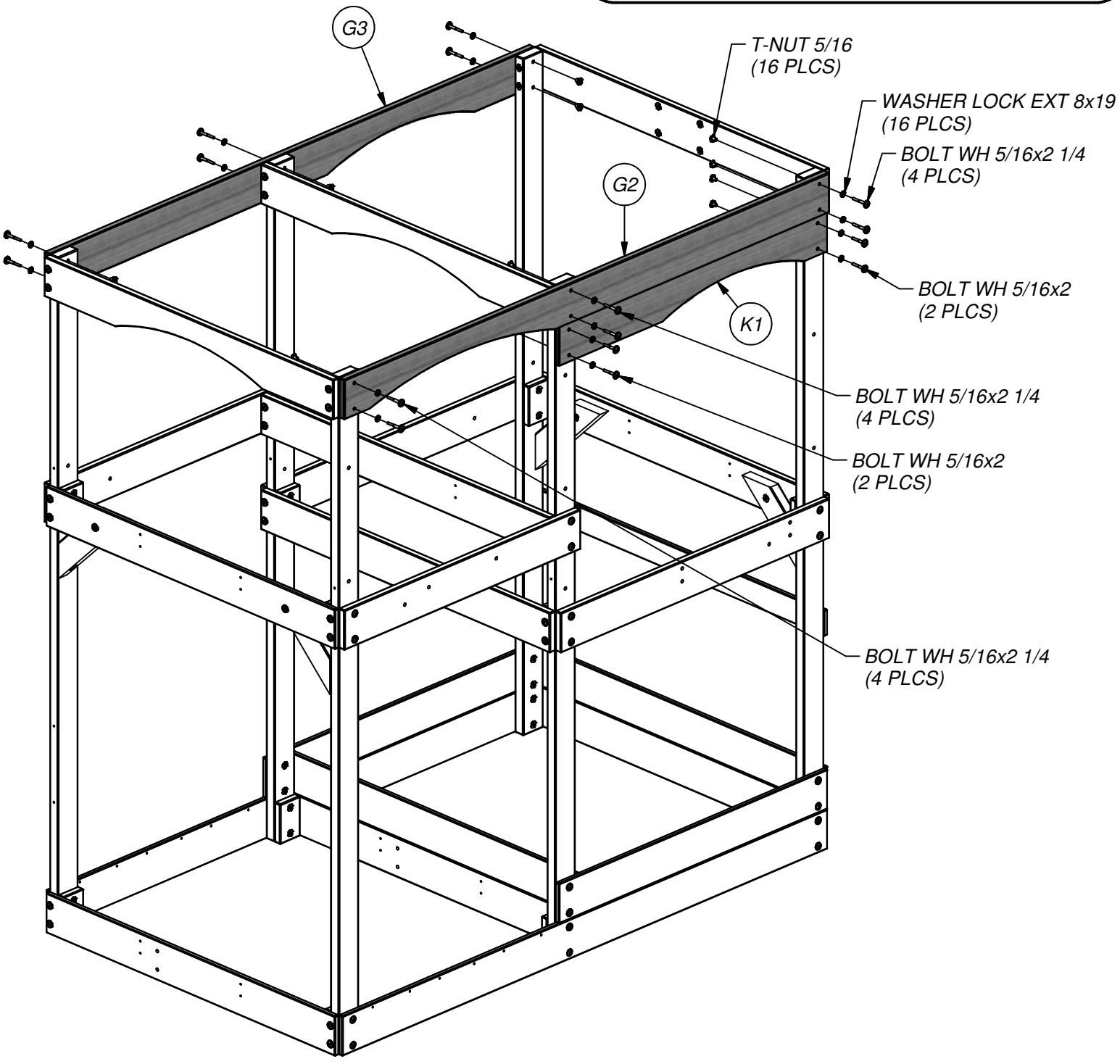

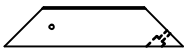

(4) ***E4 - DECK BRACE - W100615***
1 3/8"x3 3/8"x15 1/2" (36x86x394)

STEP 7

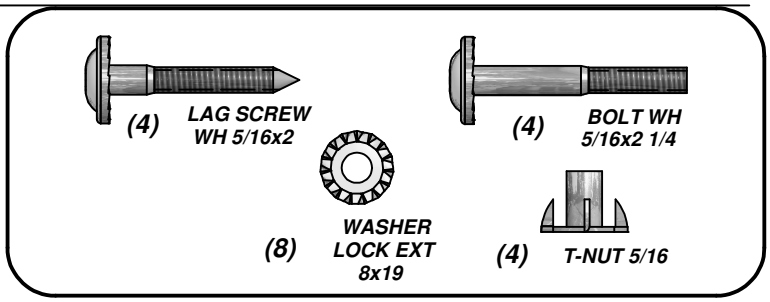

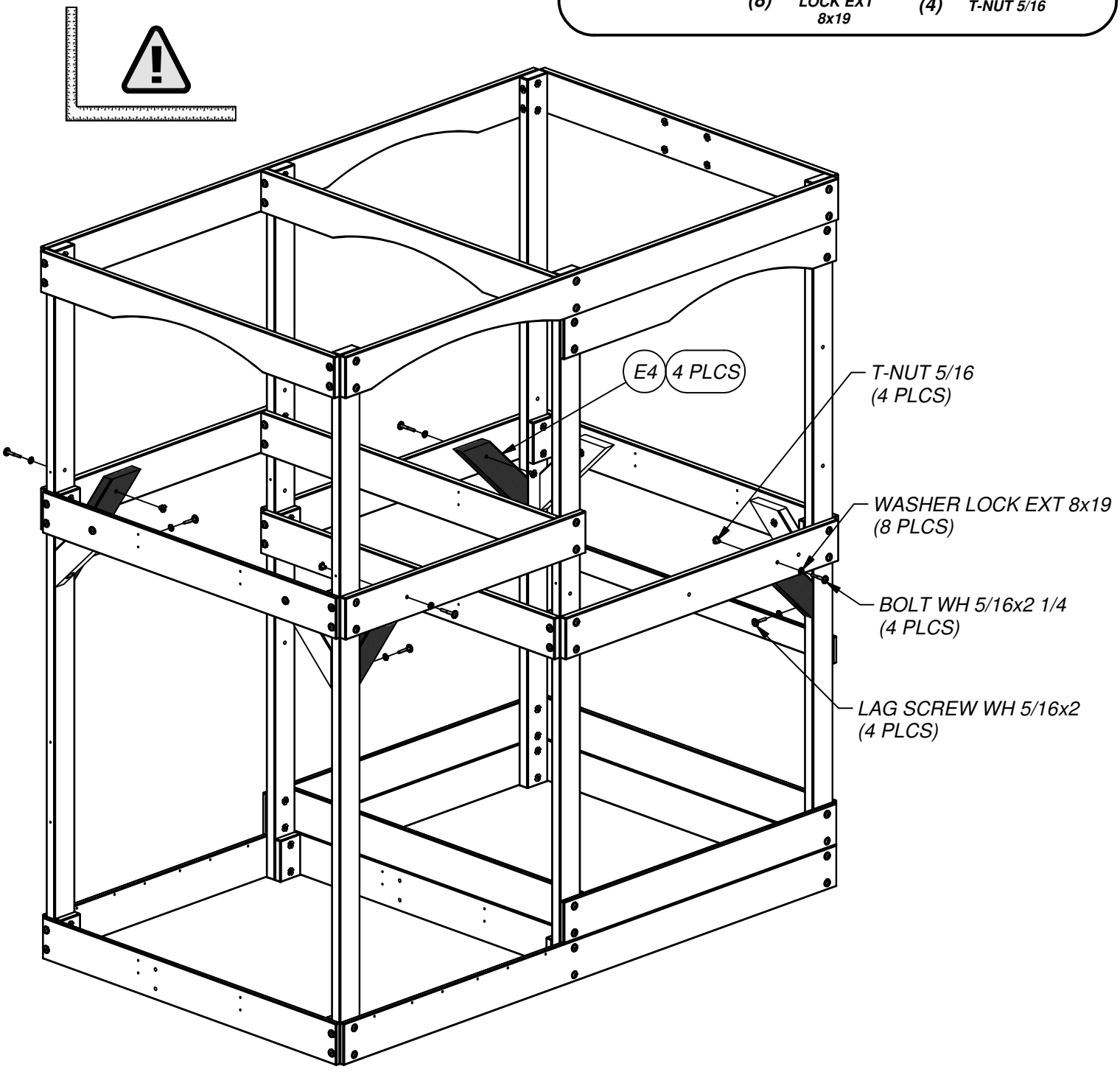

(2) ***H1 - FLOOR JOIST - W100630***
1"x3 3/8"x45 1/2" (24x86x1156)

(2) ***H3 - FLOOR JOIST - W100632***
1"x3 3/8"x40 1/8" (24x86x1018)

(2) ***H9 - FLOOR JOIST - W100638***
1"x3 3/8"x35 3/4" (24x86x908)

(1) ***SQ - "A" REVISION TAG - A100314***

STEP 8

(2) ***SCREW PWH 8x5/8***

(24) ***SCREW PFH 8x2 1/2***

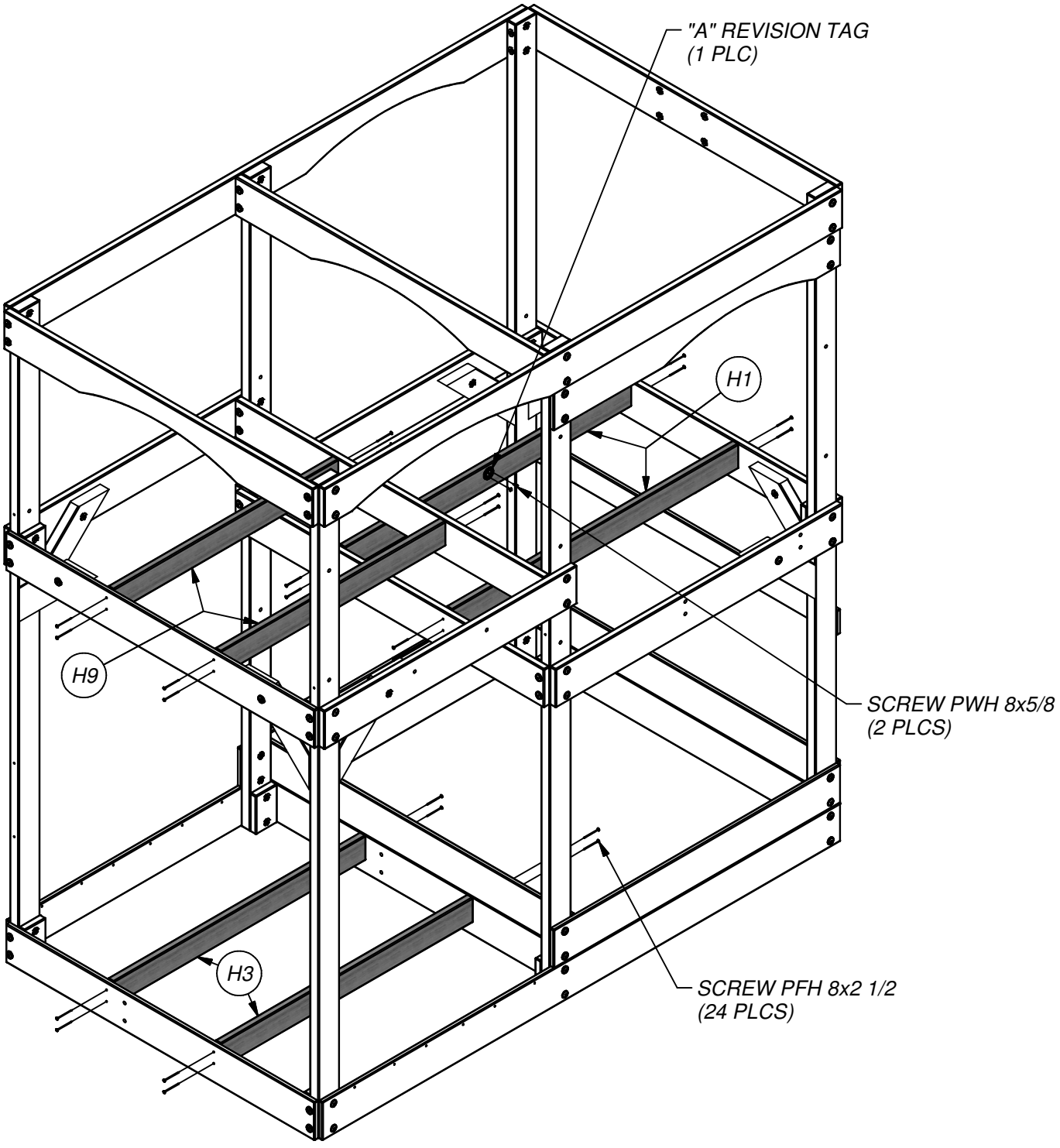

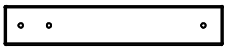

(2) ***H6 - SEAT UPRIGHT - W100635***
1"x3 3/8"x19" (24x86x482)

STEP 9

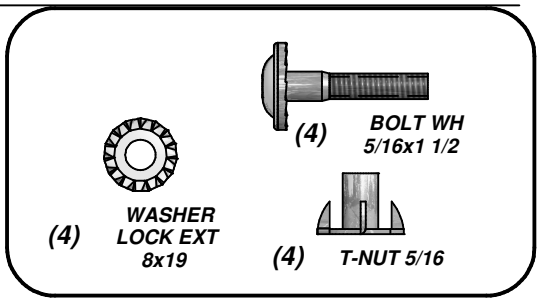

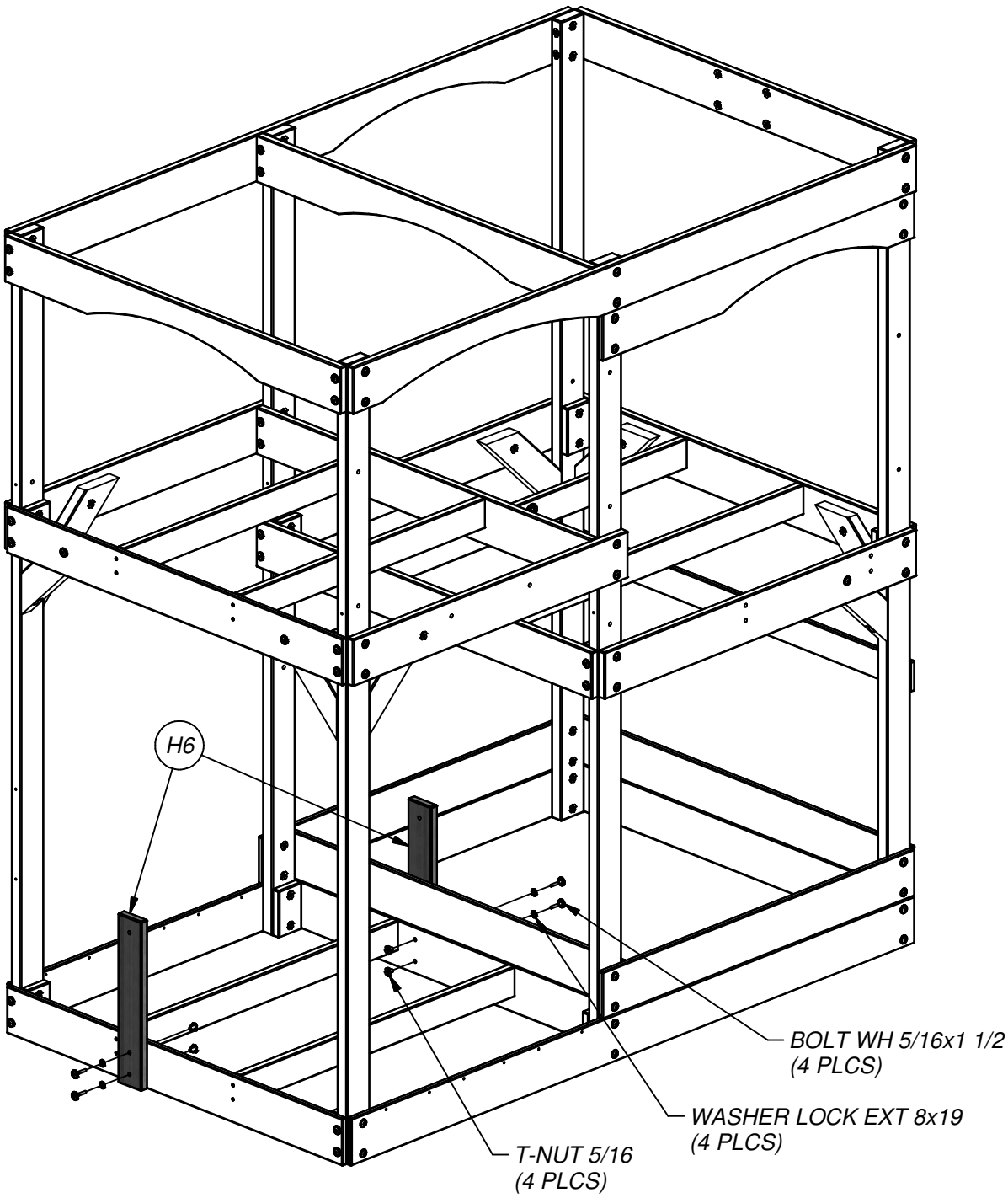

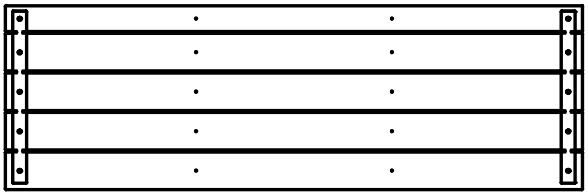

(1) ***FP2 - FLOOR PANEL - W2A01680***
1 5/8"x16 1/8"x50 1/4" (40x408x1276)

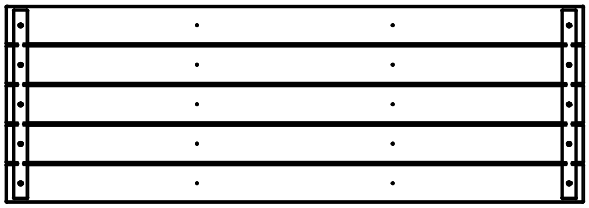

(1) ***FP1 - FLOOR PANEL - W2A01679***
1 5/8"x17 1/8"x50 1/4" (40x434x1276)

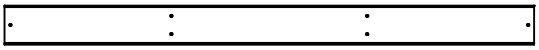

(1) ***M2 - FLOOR BOARD - W4L05411***
5/8"x3 3/8"x46" (16x86x1168)

STEP 10

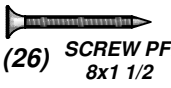

(26) ***SCREW PFH 8x1 1/2***

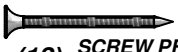

(12) ***SCREW PFH 8x1 3/4***

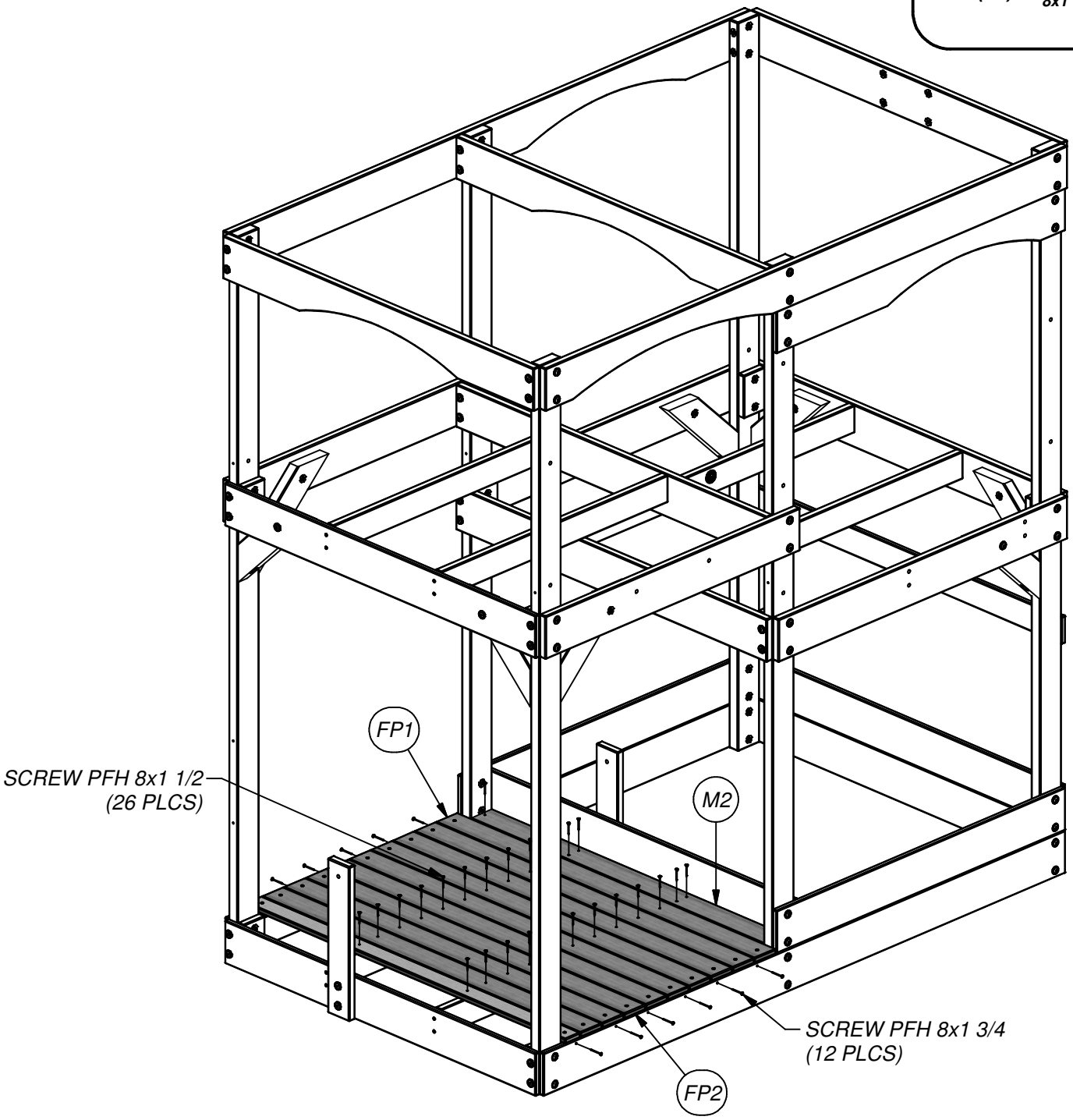

(2) ***L1 - OUTSIDE FILLER FLOOR BOARD - W4L05406 5/8"x4 3/8"x46" (16x112x1168)***

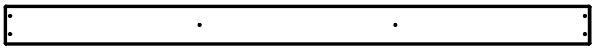

(11) ***M3 - FLOOR BOARD - W4L05400 5/8"x3 3/8"x50 7/8" (16x86x1292)***

STEP 11

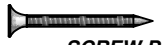

(78) ***SCREW PFH 8x1 1/2***

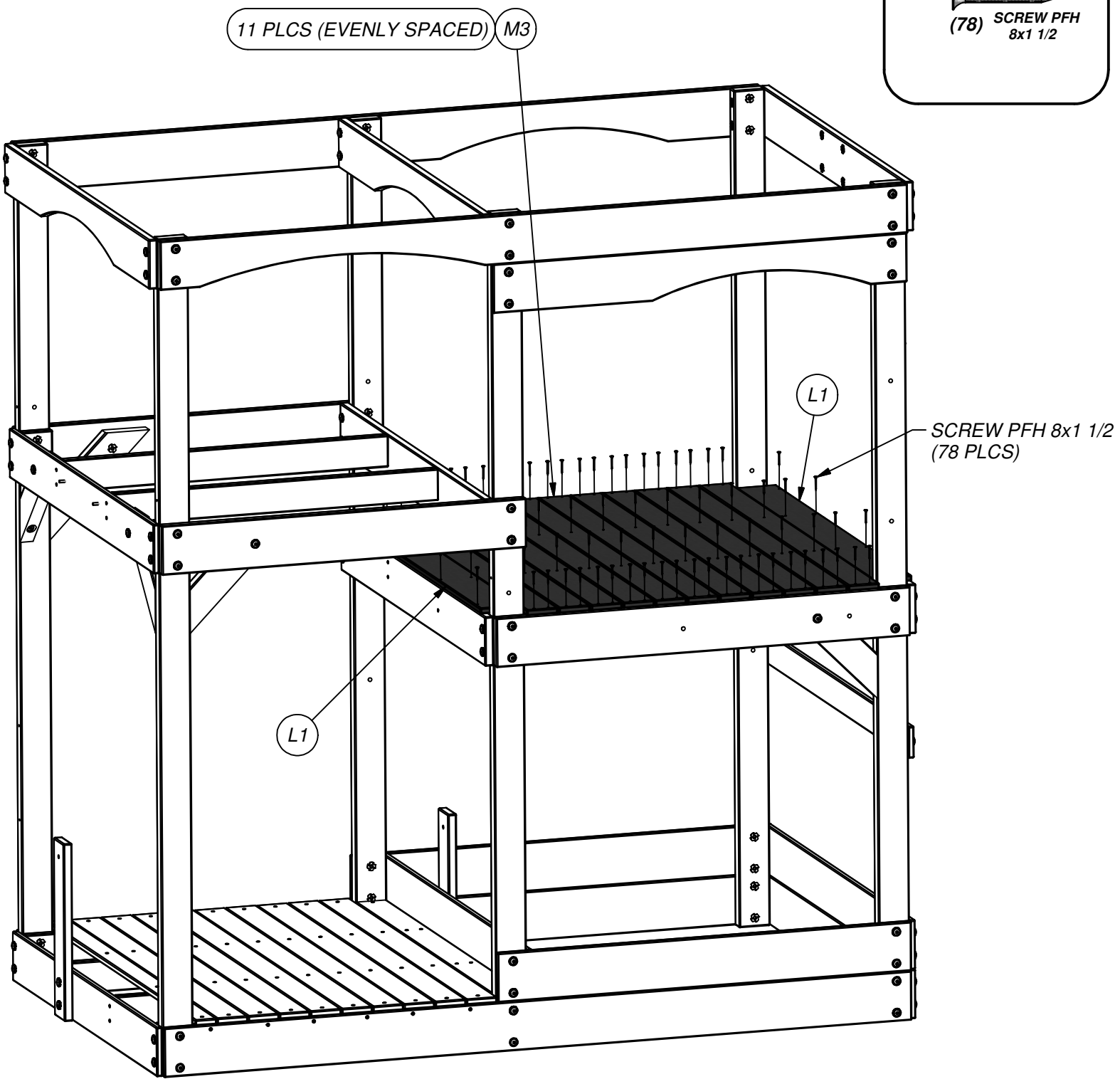

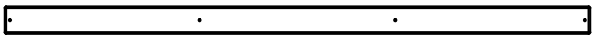

(1) ***N1 - FLOOR BOARD - W4L05399***
5/8"x2 3/8"x50 7/8" (16x60x1292)

(1) ***L1 - OUTSIDE FILLER FLOOR BOARD - W4L05406***
5/8"x4 3/8"x46" (16x112x1168)

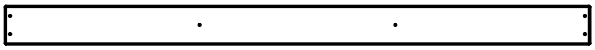

(9) ***M3 - FLOOR BOARD - W4L05400***
5/8"x3 3/8"x50 7/8" (16x86x1292)

STEP 12

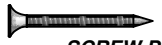

(64) ***SCREW PFH***
8x1 1/2

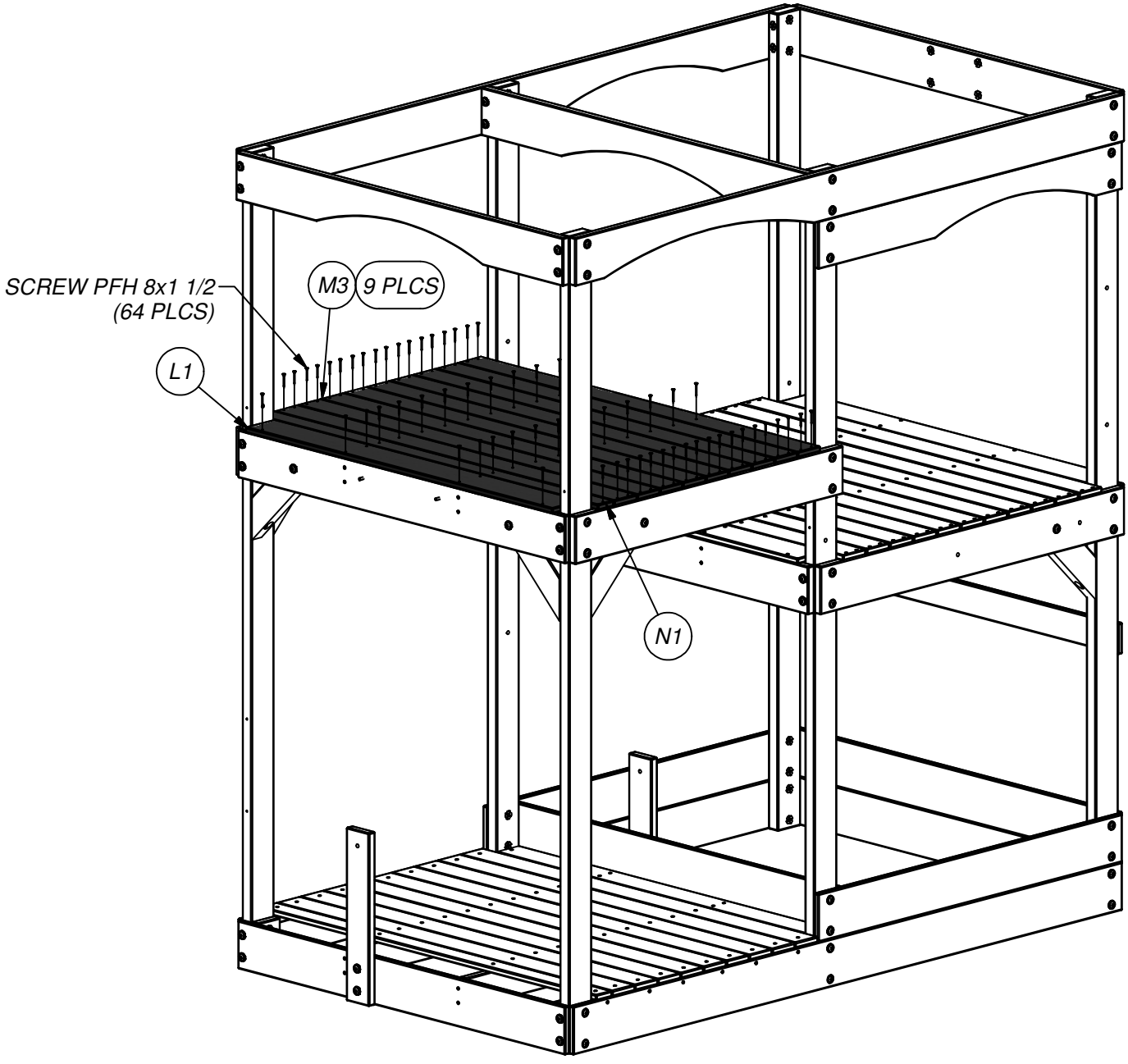

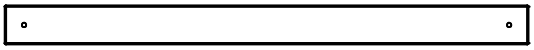

(2) ***M6 - WALL RAIL - W100648***
5/8"x3 3/8"x45 1/2" (16x86x1156)

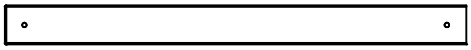

(1) ***M11 - WALL RAIL - W100653***
5/8"x3 3/8"x40 1/8" (16x86x1018)

STEP 13

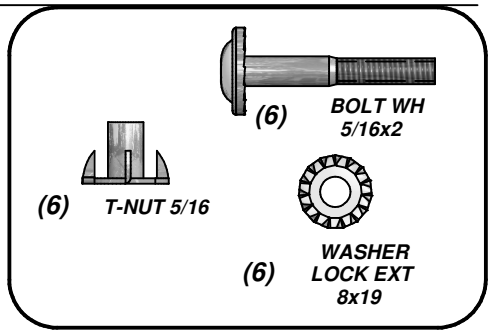

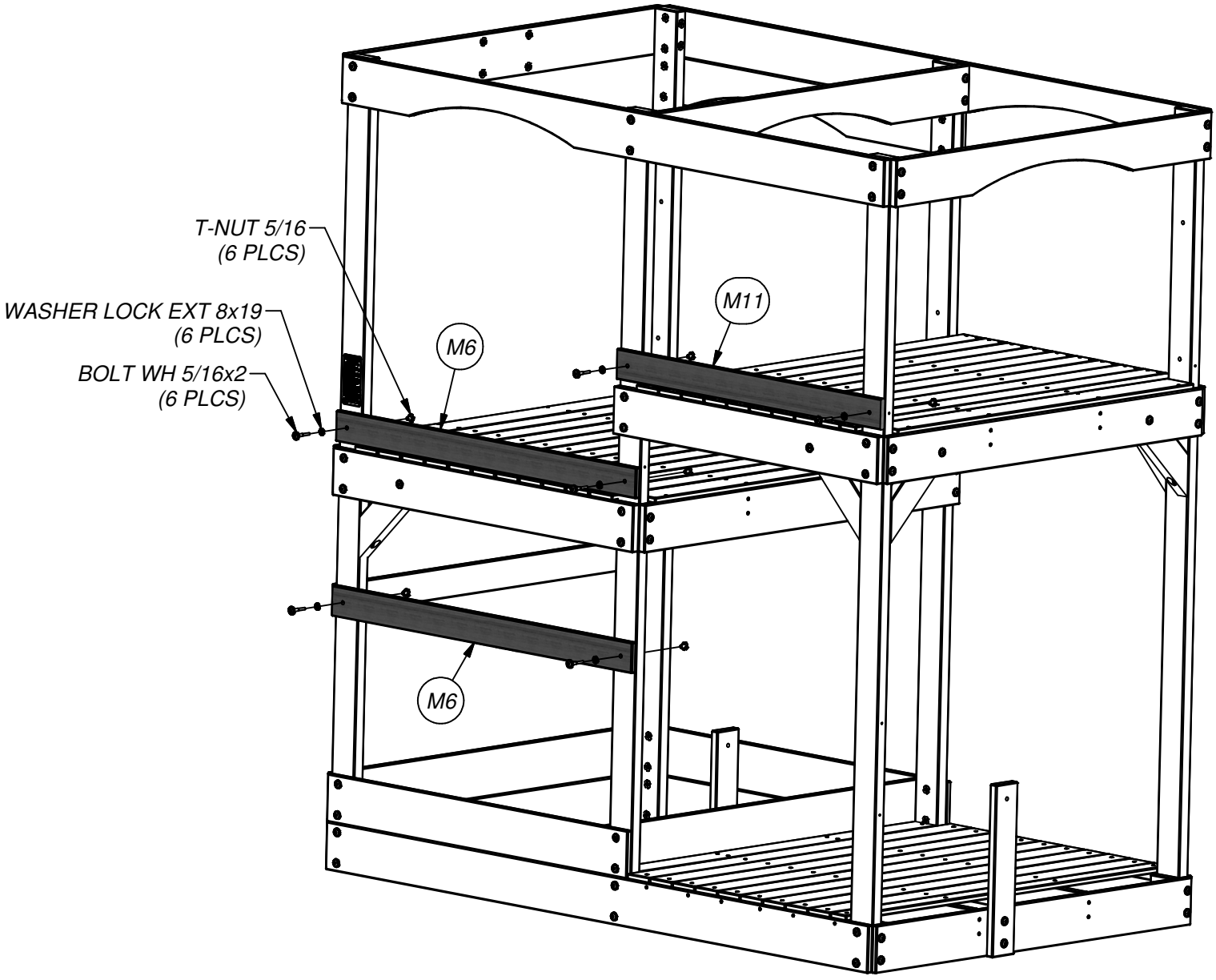

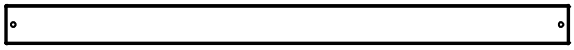

(1) ***M5 - WALL RAIL - W100647***
5/8"x3 3/8"x49" (16x86x1244)

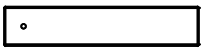

(1) ***M18 - WALL RAIL - W100660***
5/8"x3 3/8"x16 7/8" (16x86x430)

STEP 14

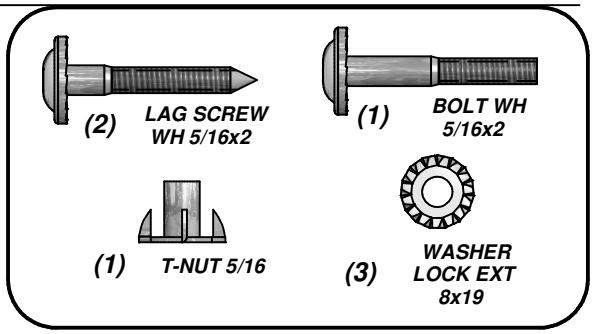

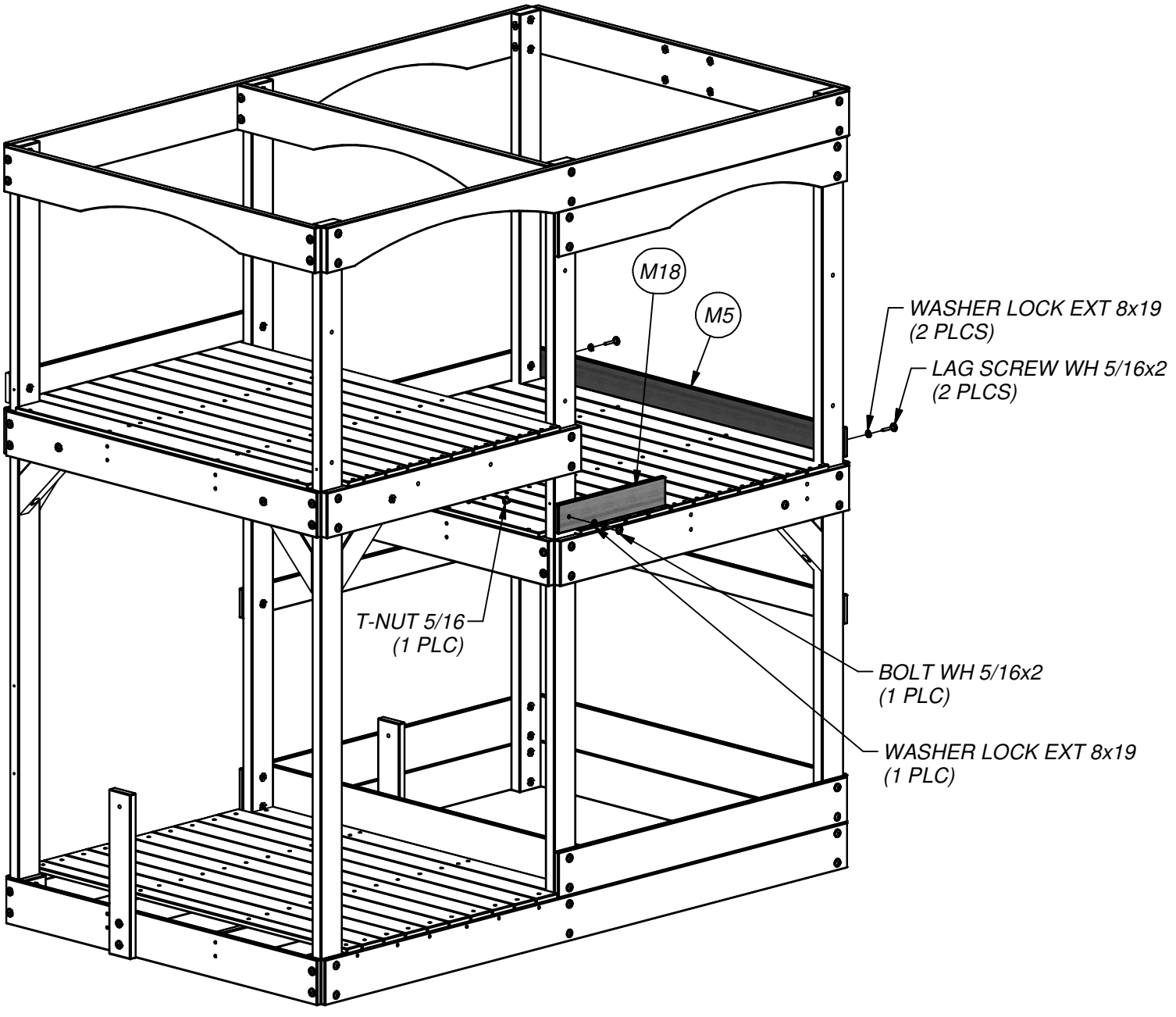

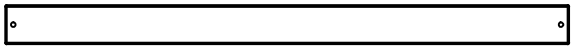

(1) ***M5 - WALL RAIL - W100647***
5/8"x3 3/8"x49" (16x86x1244)

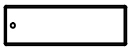

(2) ***M21 - WALL RAIL - W4L05383***
5/8"x3 3/8"x10 1/2" (16x86x268)

STEP 15

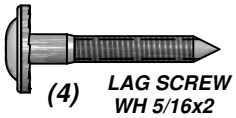

(4) ***LAG SCREW WH 5/16x2***

(4) ***WASHER LOCK EXT 8x19***

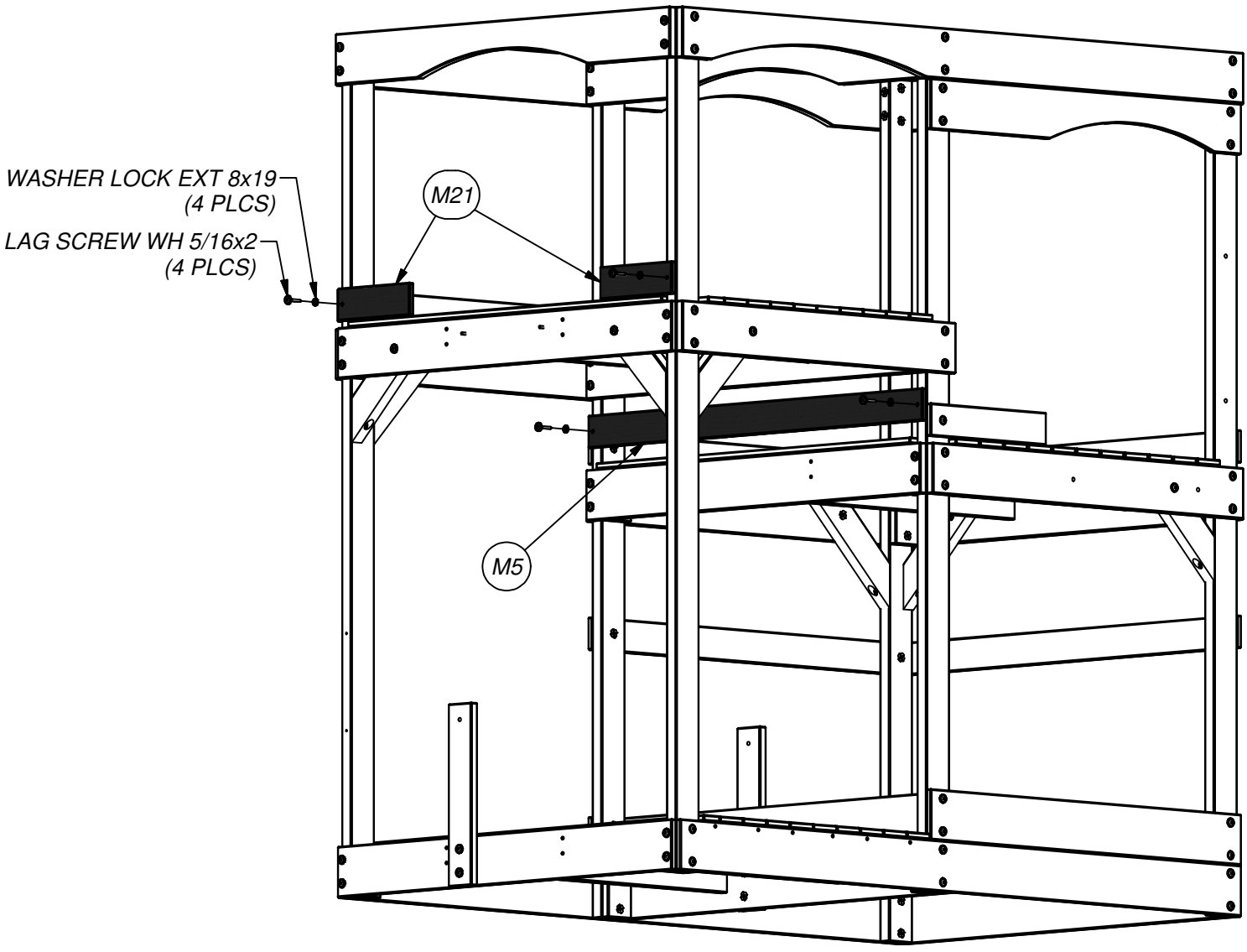

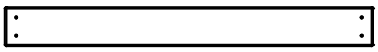

(6) ***M9 - WALL BOARD - W100651***
5/8"x3 3/8"x32" (16x86x812)

STEP 16

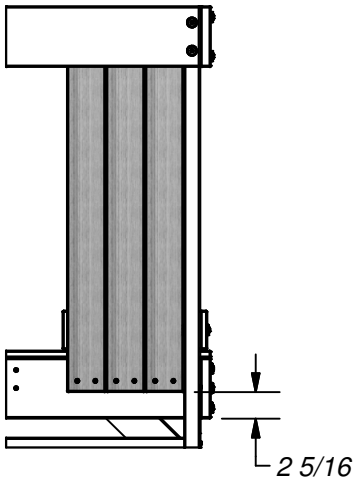

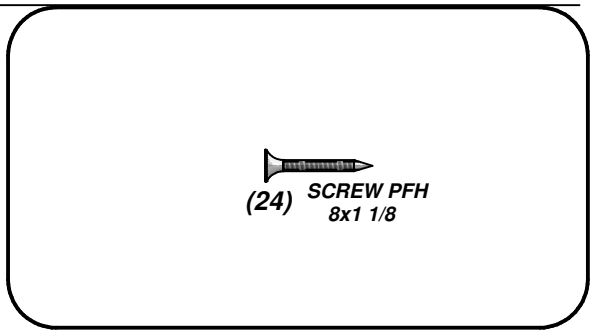

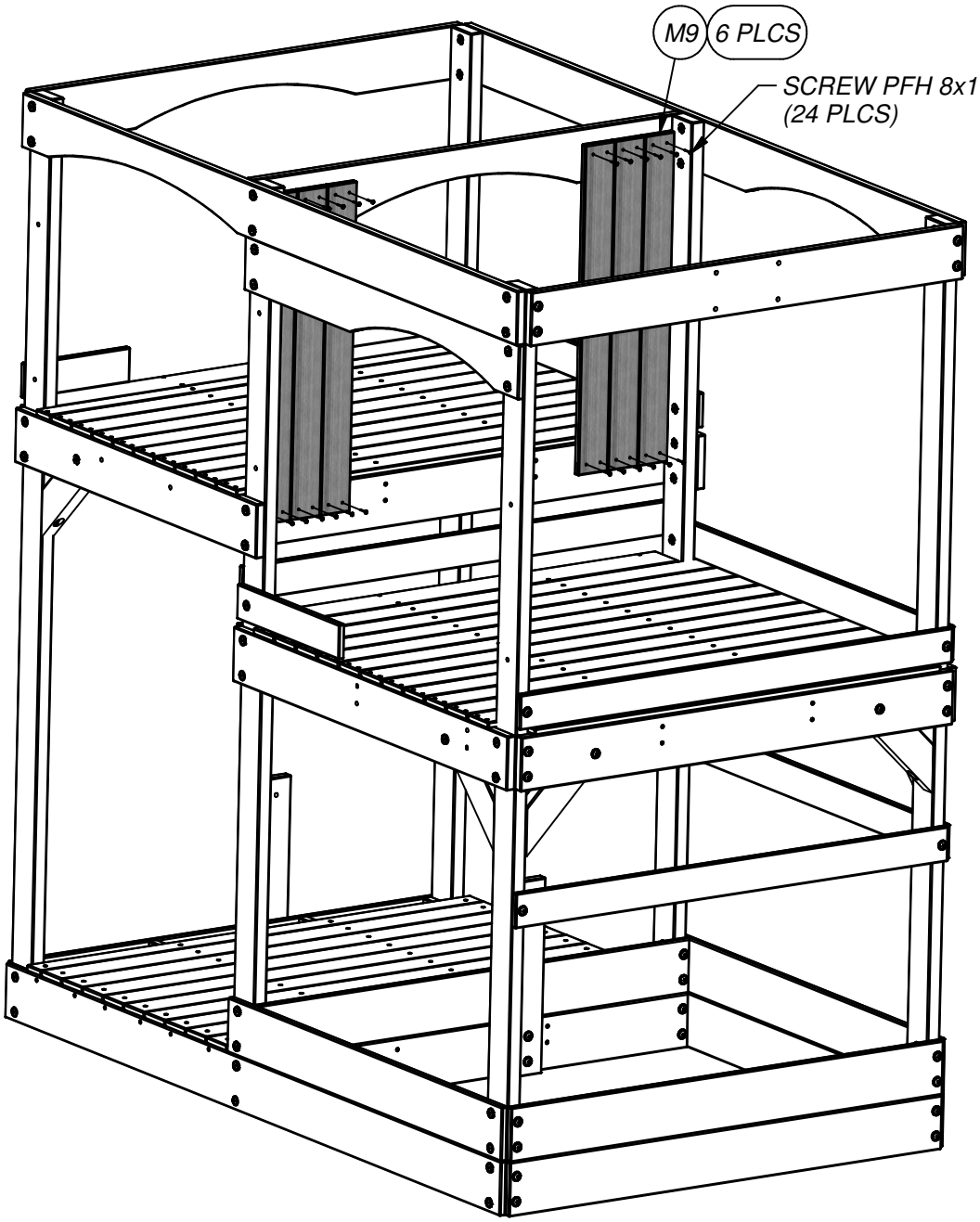

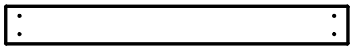

(4) ***M24 - WALL BOARD - W4L04632***
5/8"x3 3/8"x29 7/8" (16x86x758)

STEP 17

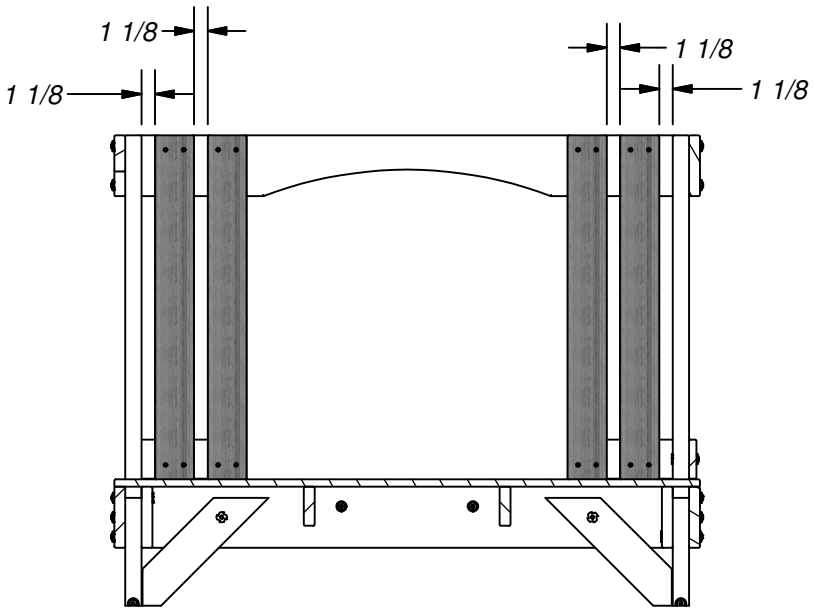

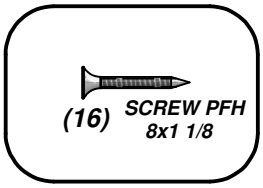

(16) ***SCREW PFH 8x1 1/8***

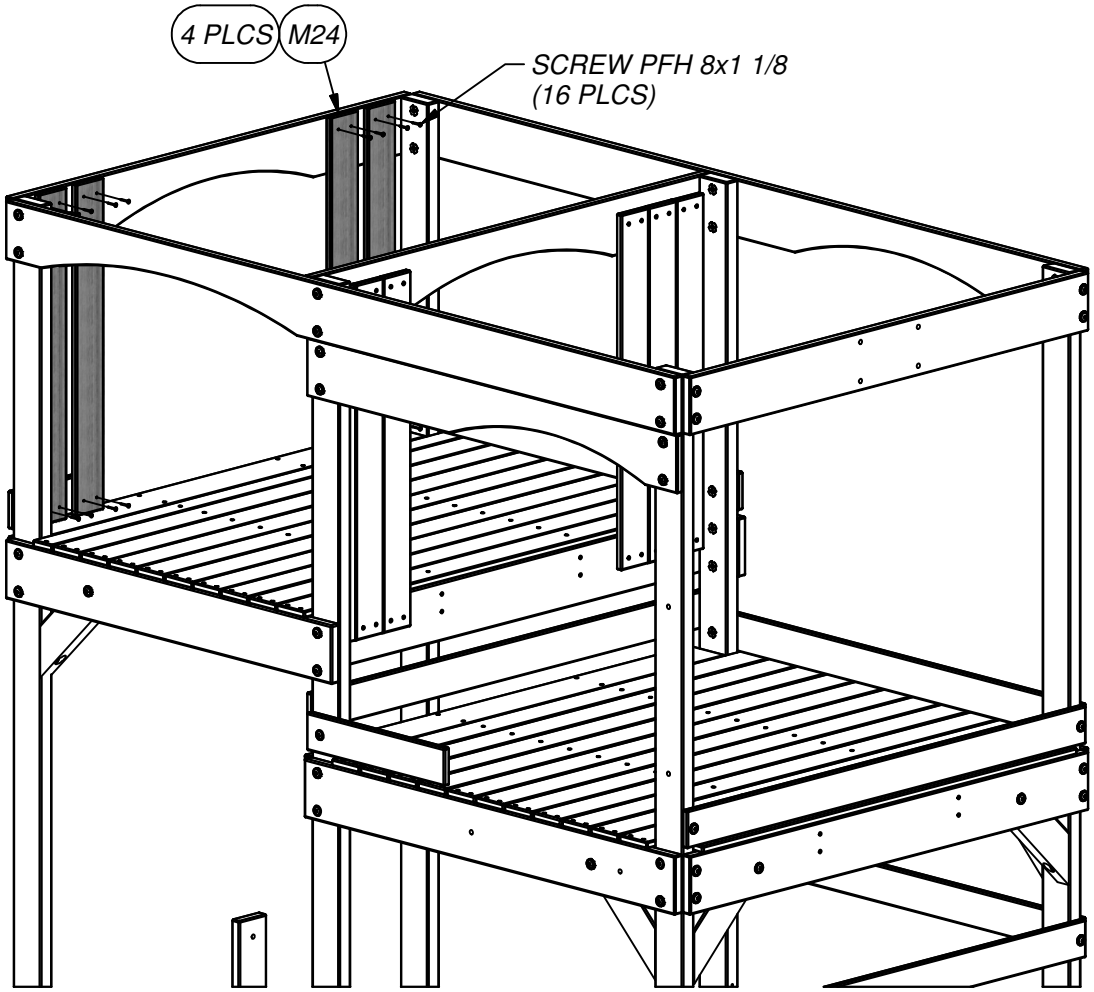

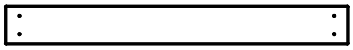

(5) ***M24 - WALL BOARD - W4L04632***
5/8"x3 3/8"x29 7/8" (16x86x758)

STEP 18

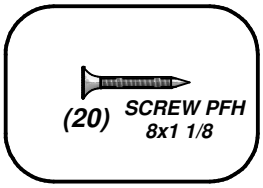

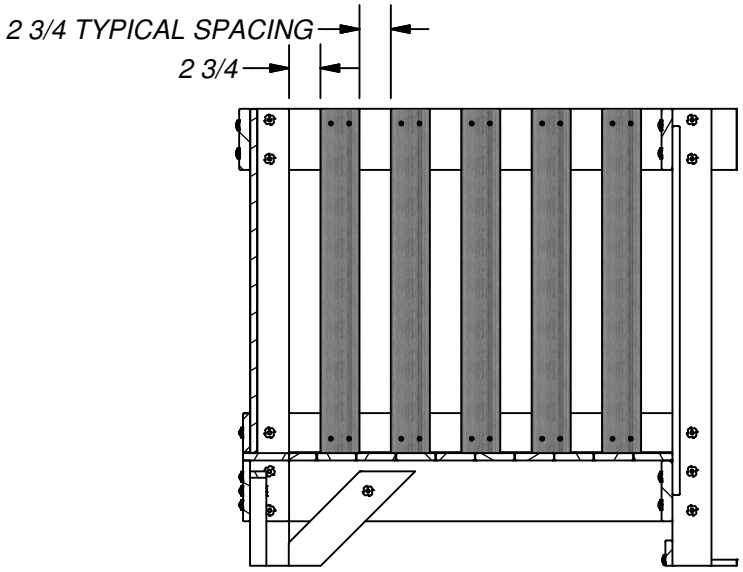

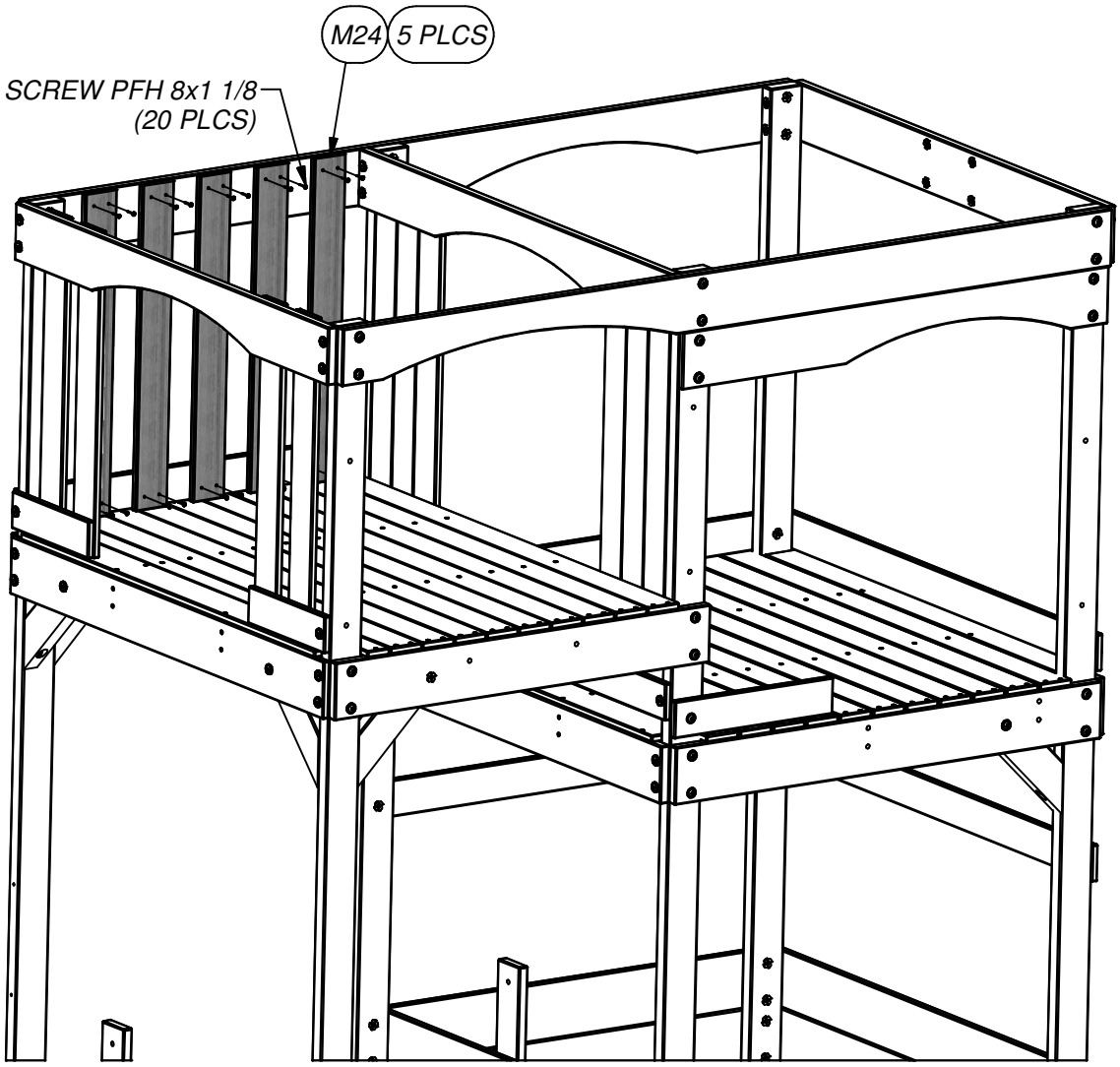

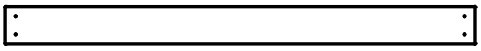

(4) ***M8 - WALL BOARD - W100650***
5/8"x3 3/8"x41" (16x86x1040)

STEP 19

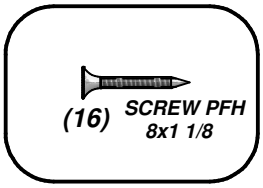

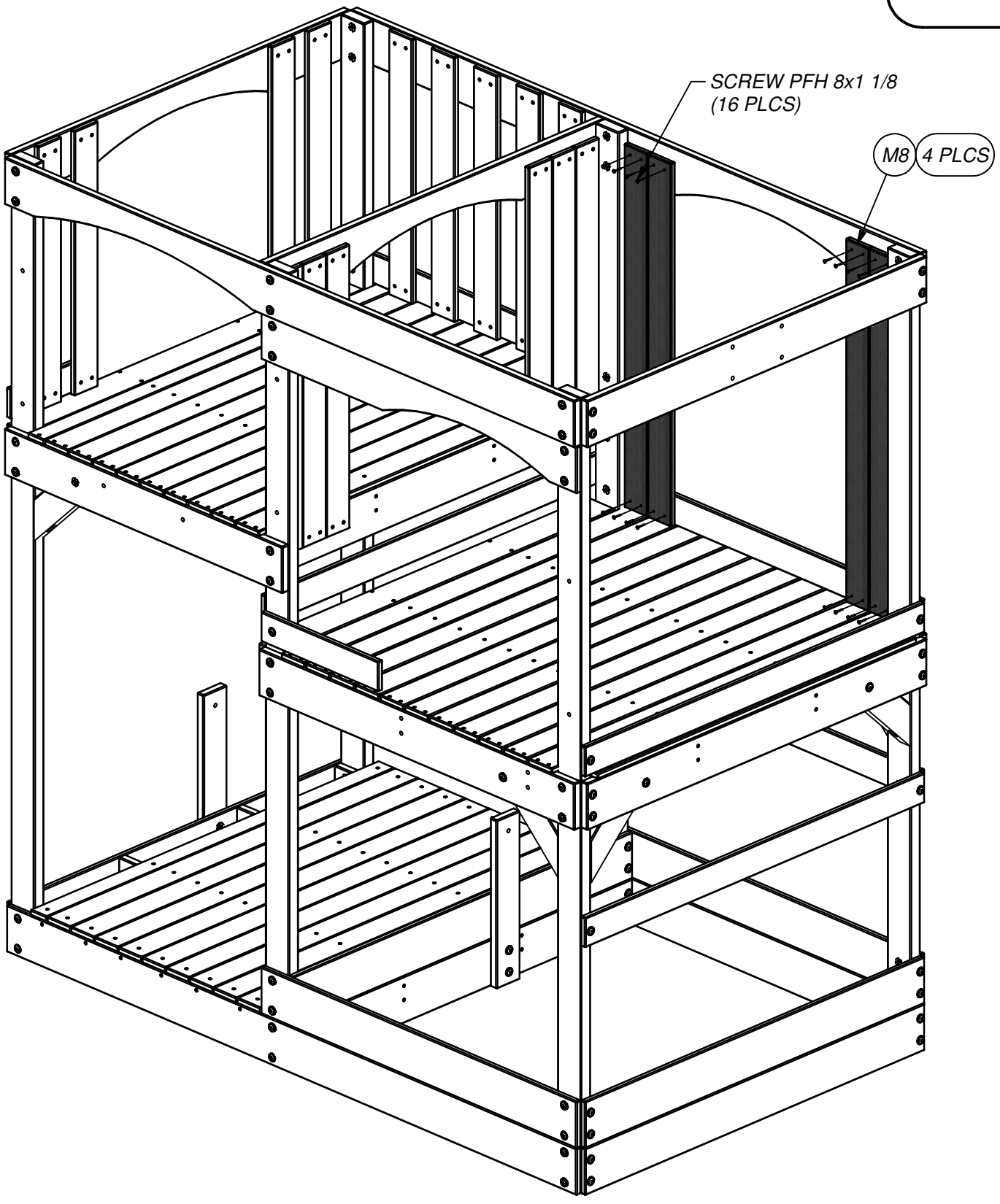

(7) ***M13 - WALL BOARD - W100655***
5/8"x3 3/8"x24 1/4" (16x86x616)

(1) ***M12 - WINDOW TRIM - W100654***
5/8"x3 3/8"x32" (16x86x812)

STEP 20

(28) ***SCREW PFH 8x1 1/8***

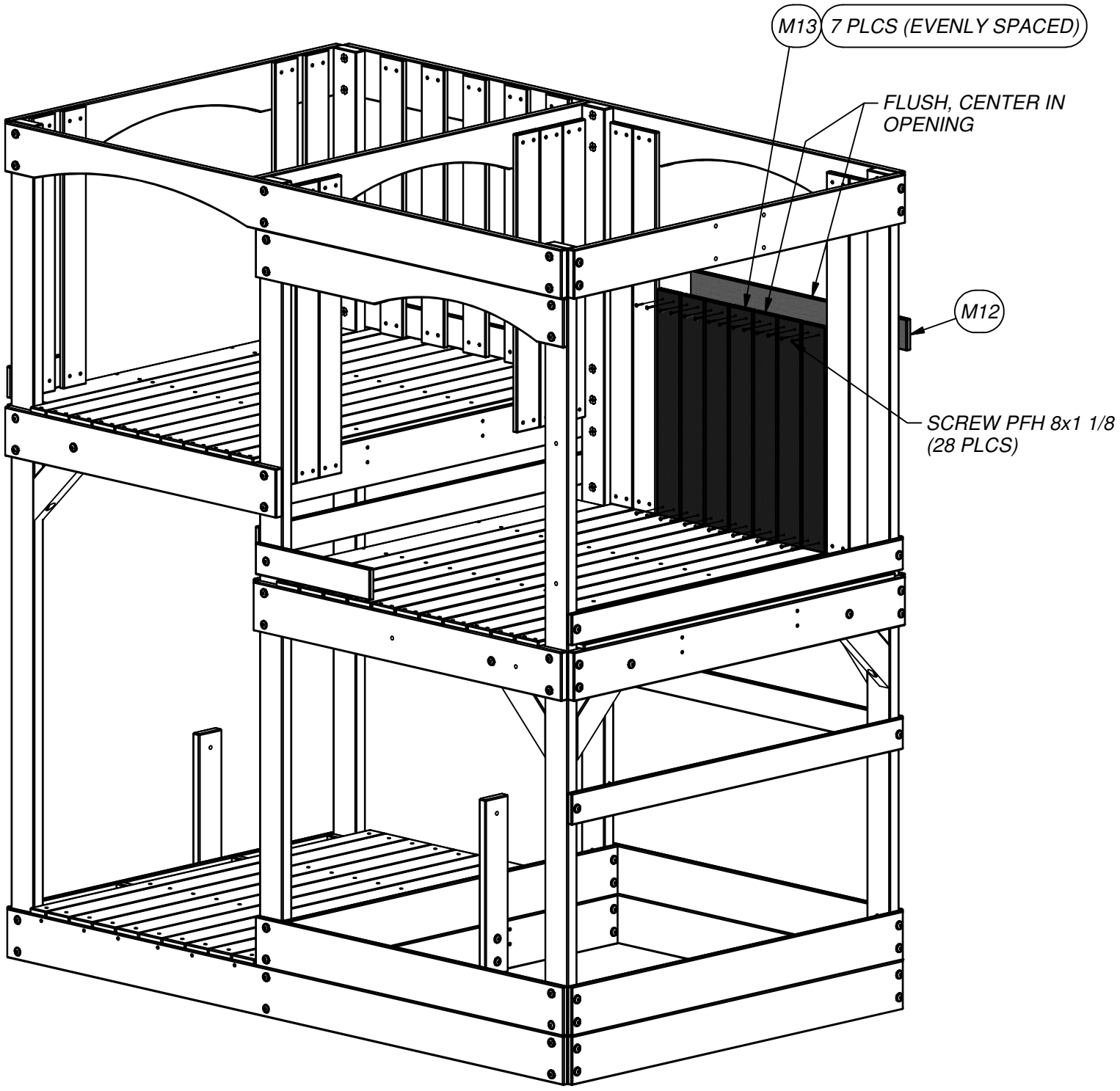

(2) ***M23 - WINDOW TRIM - W100665***
5/8"x3 3/8"x12 7/8" (16x86x328)

STEP 21

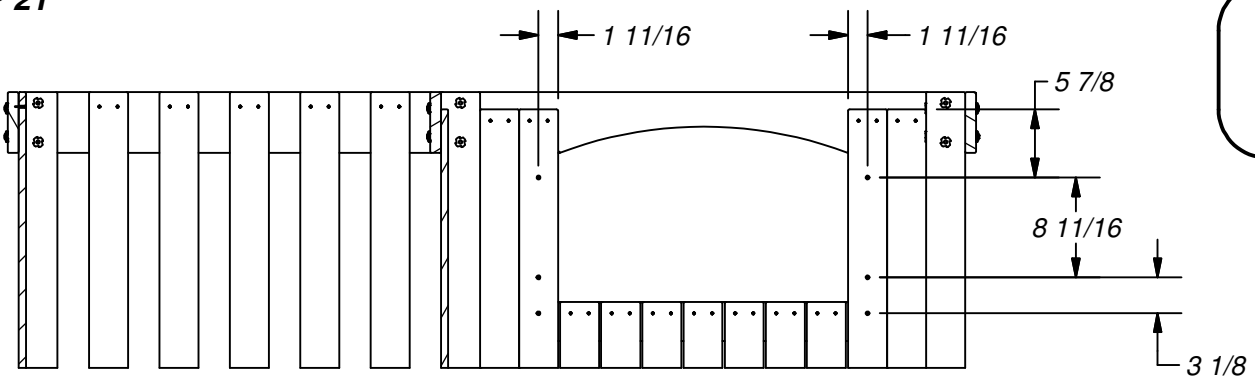

(6) ***SCREW PFH 8x1 1/8***

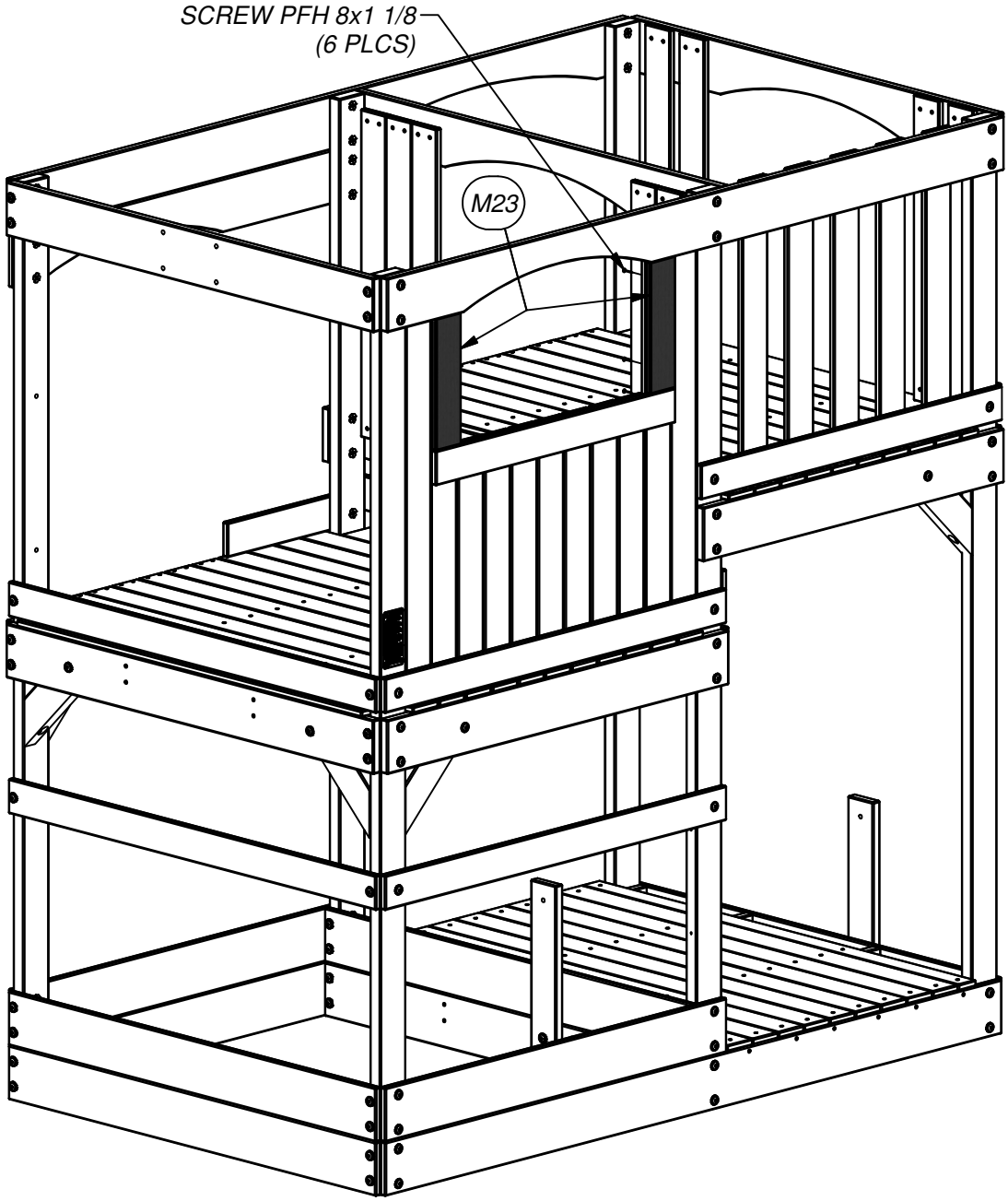

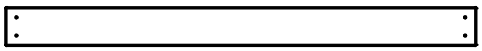

(7) ***M8 - WALL BOARD - W100650***
5/8"x3 3/8"x41" (16x86x1040)

(4) ***L3 - WALL BOARD - W100642***
5/8"x4 3/8"x7" (16x112x178)

(4) ***L2 - WALL BOARD - W100641***
5/8"x4 3/8"x18" (16x112x456)

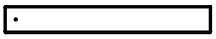

(2) ***N3 - WALL BOARD - W100669***
5/8"x2 3/8"x18" (16x60x456)

(2) ***N5 - WALL BOARD - W100671***
5/8"x2 3/8"x7" (16x60x178)

STEP 22

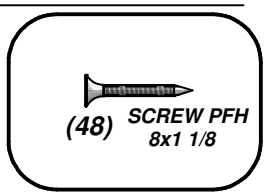

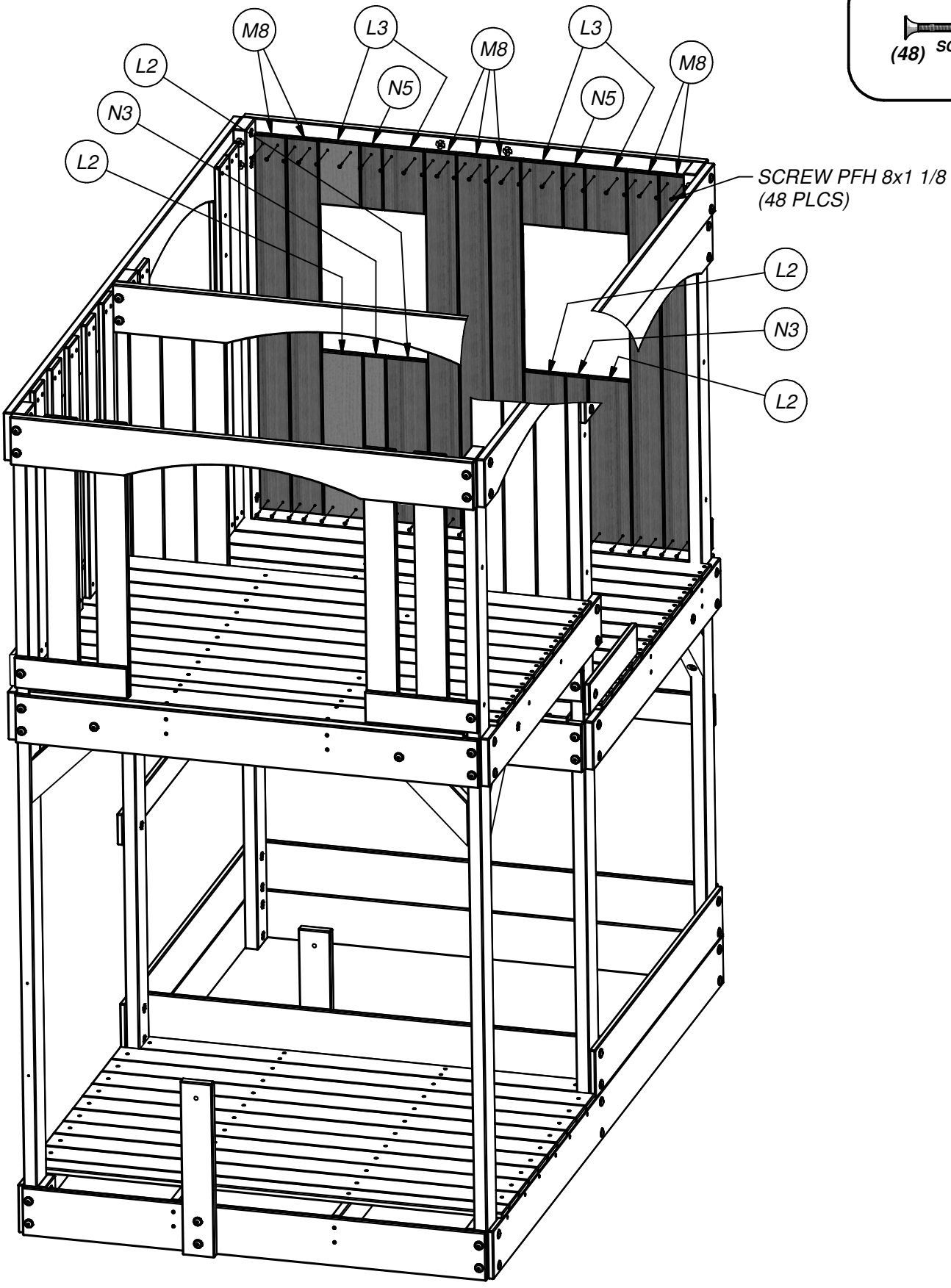

(2) ***O1 - WALL SUPPORT - W100672***
5/8"x1 3/8"x13" (16x34x330)

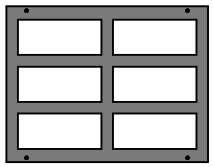

(2) ***HN - PLASTIC WINDOW BYD GREEN - A100010***

STEP 23

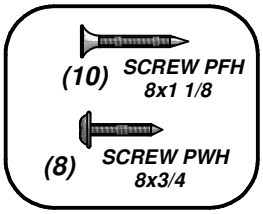

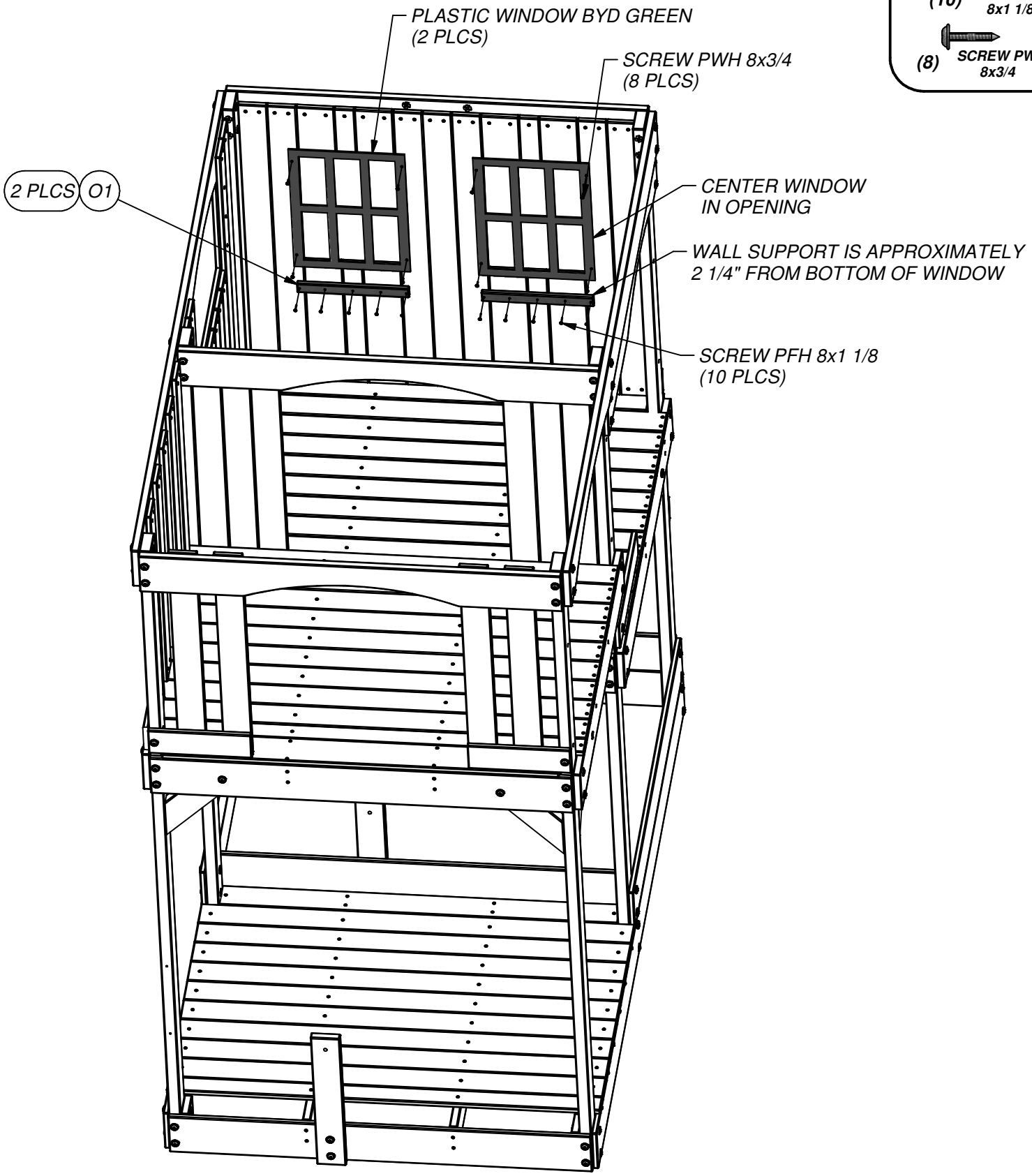

(6) **O4 - WINDOW SHUTTER SLAT - W100787**
5/8"x1 3/8"x5 3/8" (16x34x136)

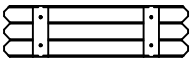

(3) **L73 - WINDOW SHUTTER - W100786**
5/8"x4 3/8"x16" (16x112x406)

STEP 24

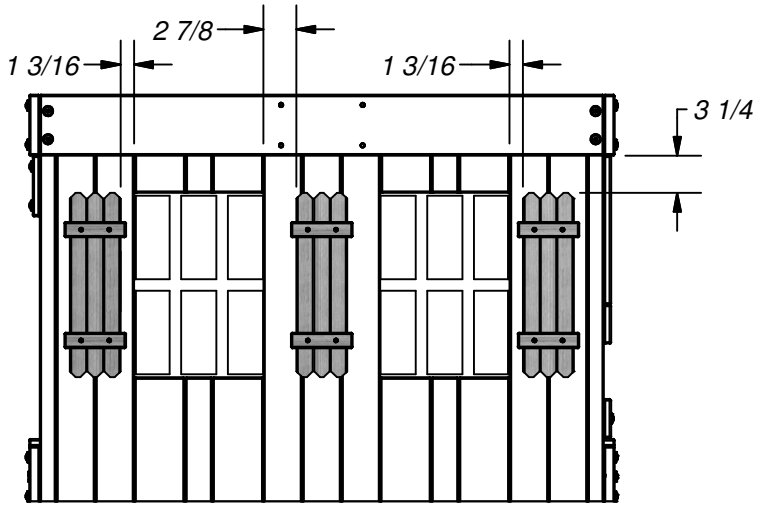

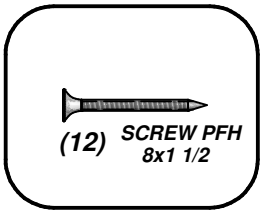

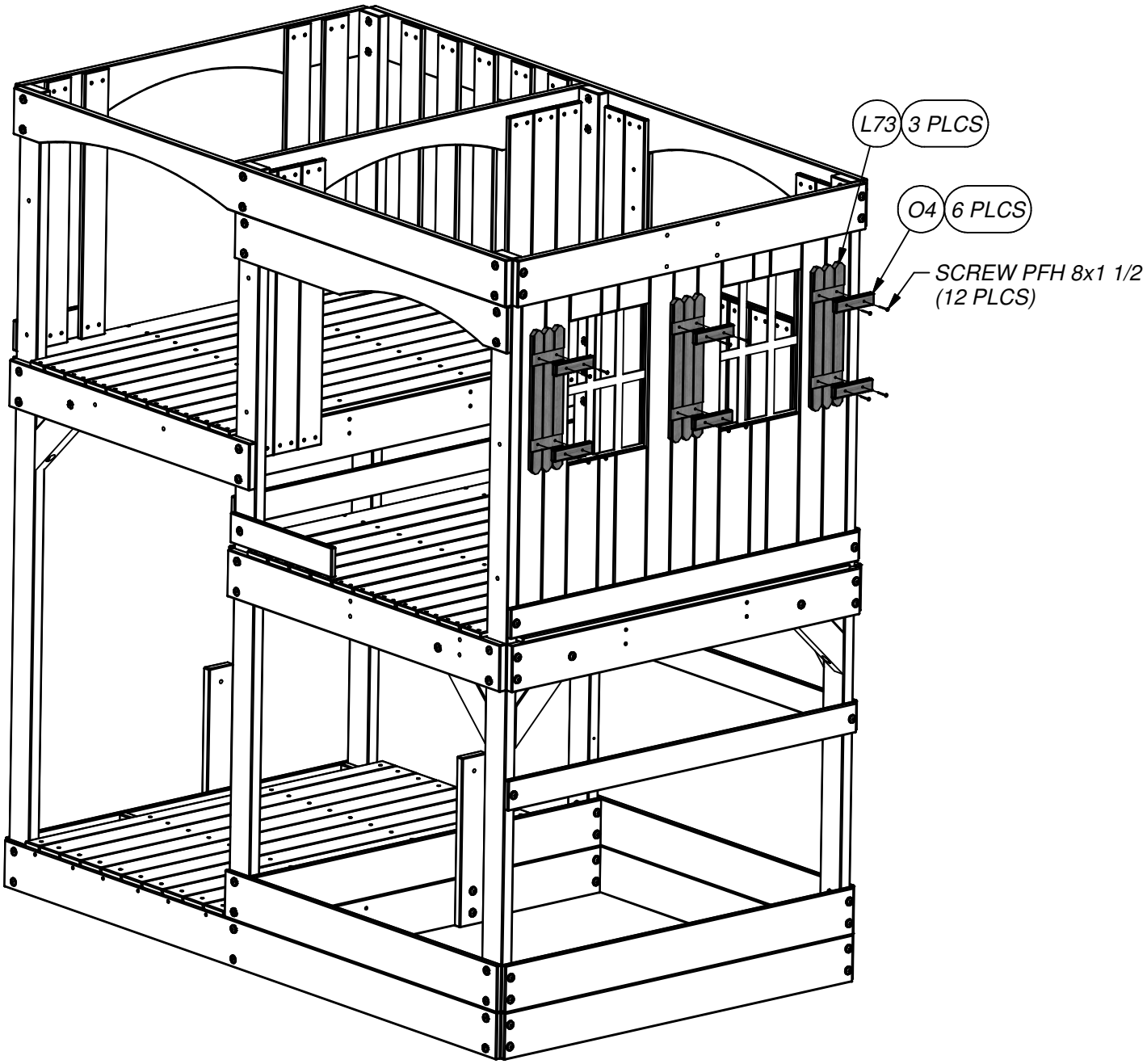

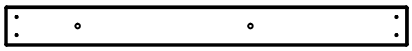

(1) ***M30 - WALL BOARD - W4L05378***
5/8"x3 3/8"x35" (16x86x888)

(1) ***M10 - WALL BOARD - W100652***
5/8"x3 3/8"x35" (16x86x888)

(2) ***M29 - WALL BOARD - W100666***
5/8"x3 3/8"x5" (16x86x126)

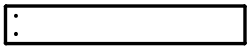

(2) ***M16 - WALL BOARD - W100658***
5/8"x3 3/8"x21" (16x86x532)

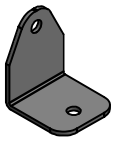

(1) ***EJ - L BRACKET 54x67 - A100053***

STEP 25

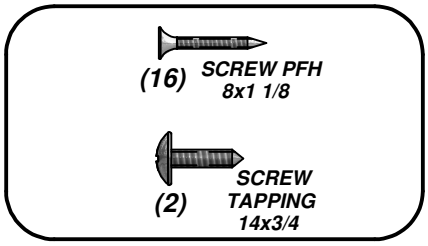

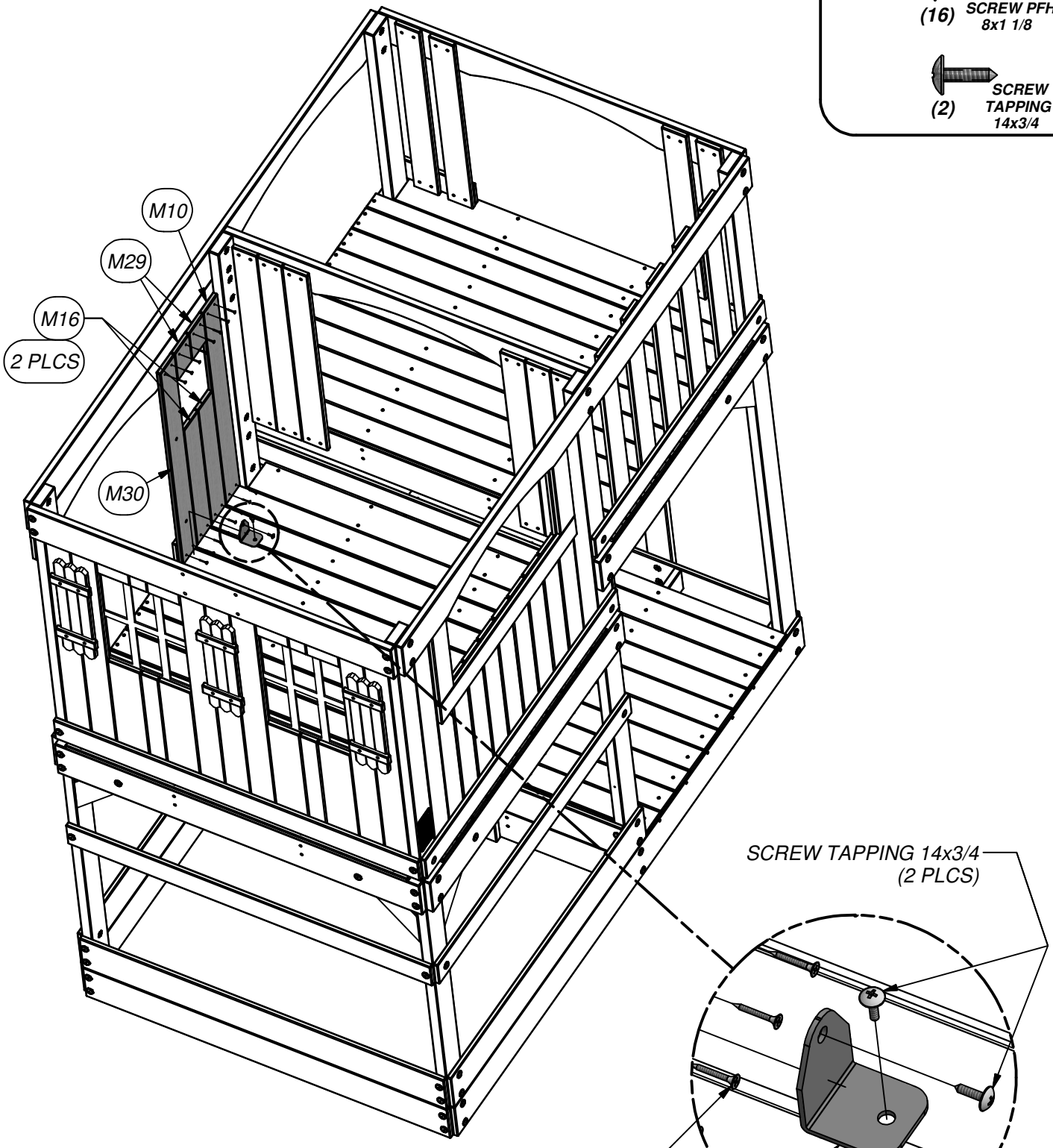

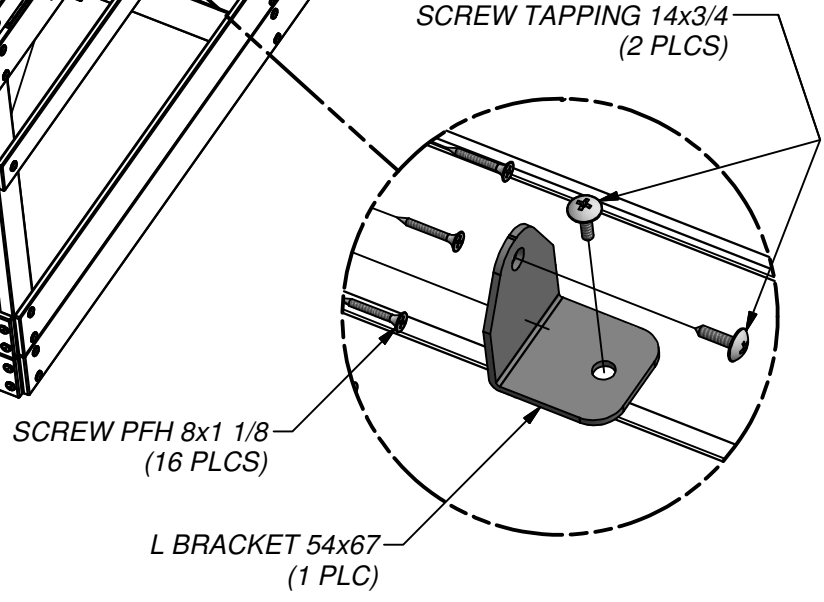

(1) ***O2 - WALL SUPPORT - W100673***
5/8"x1 3/8"x10" (16x34x254)

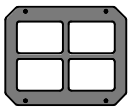

(1) ***GK - WINDOW 216x267 GREEN - A100146***

STEP 26

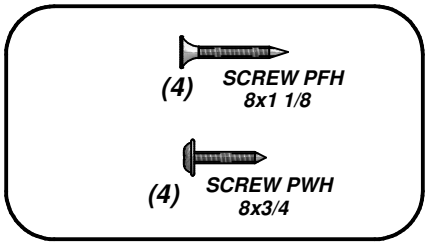

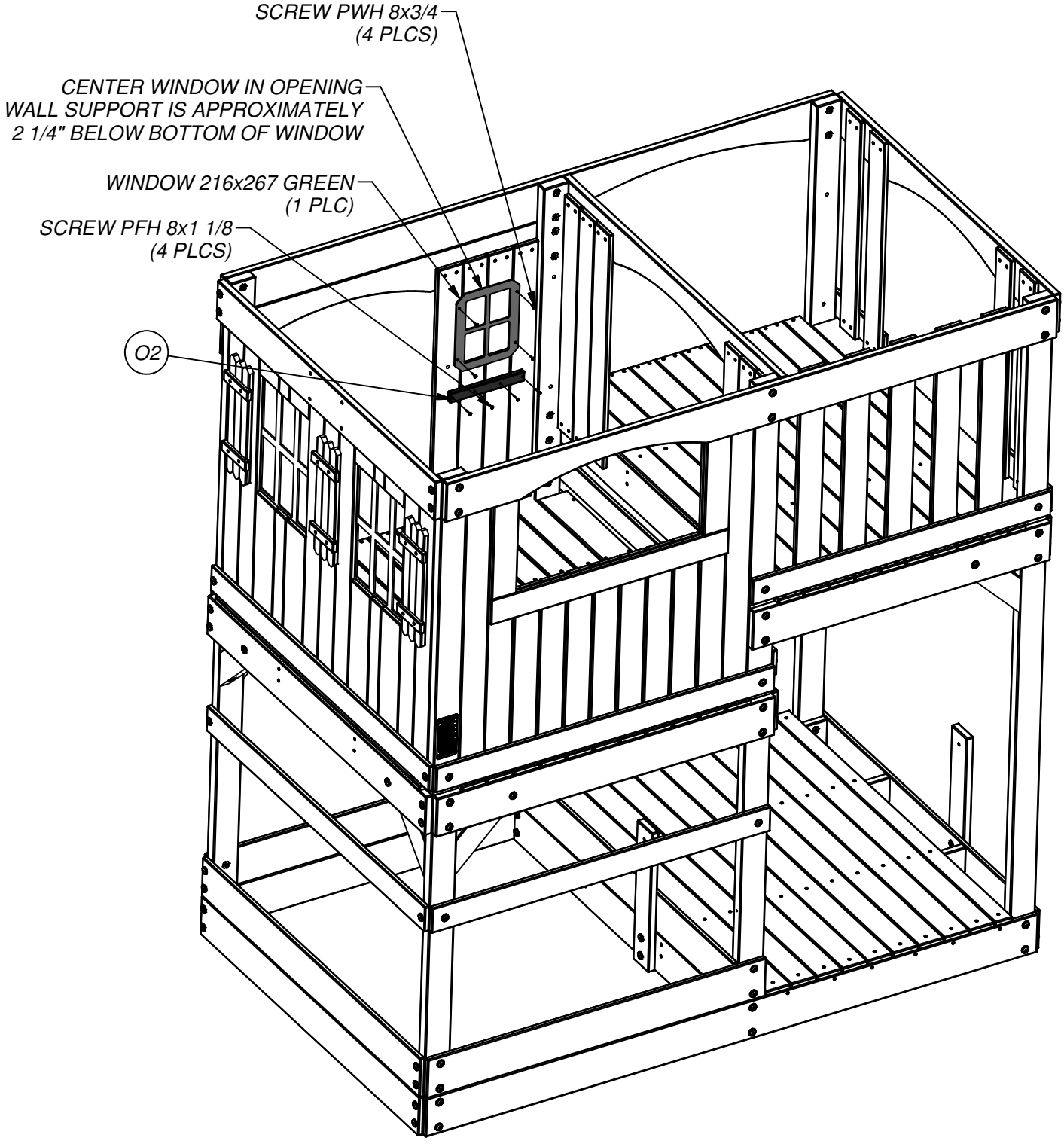

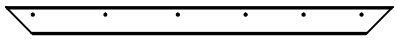

(4) ***J1 - ROOF RAFTER - W4L05410***
1"x2 3/8"x33 5/8" (24x60x854)

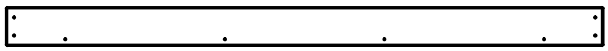

(2) ***M1 - ROOF CAP - W4L05369***
5/8"x3 3/8"x51 7/8" (16x86x1318)

STEP 27

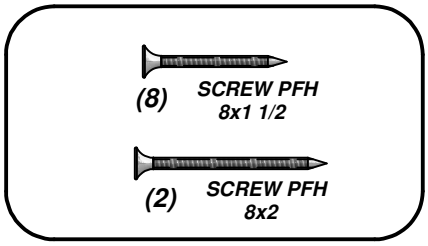

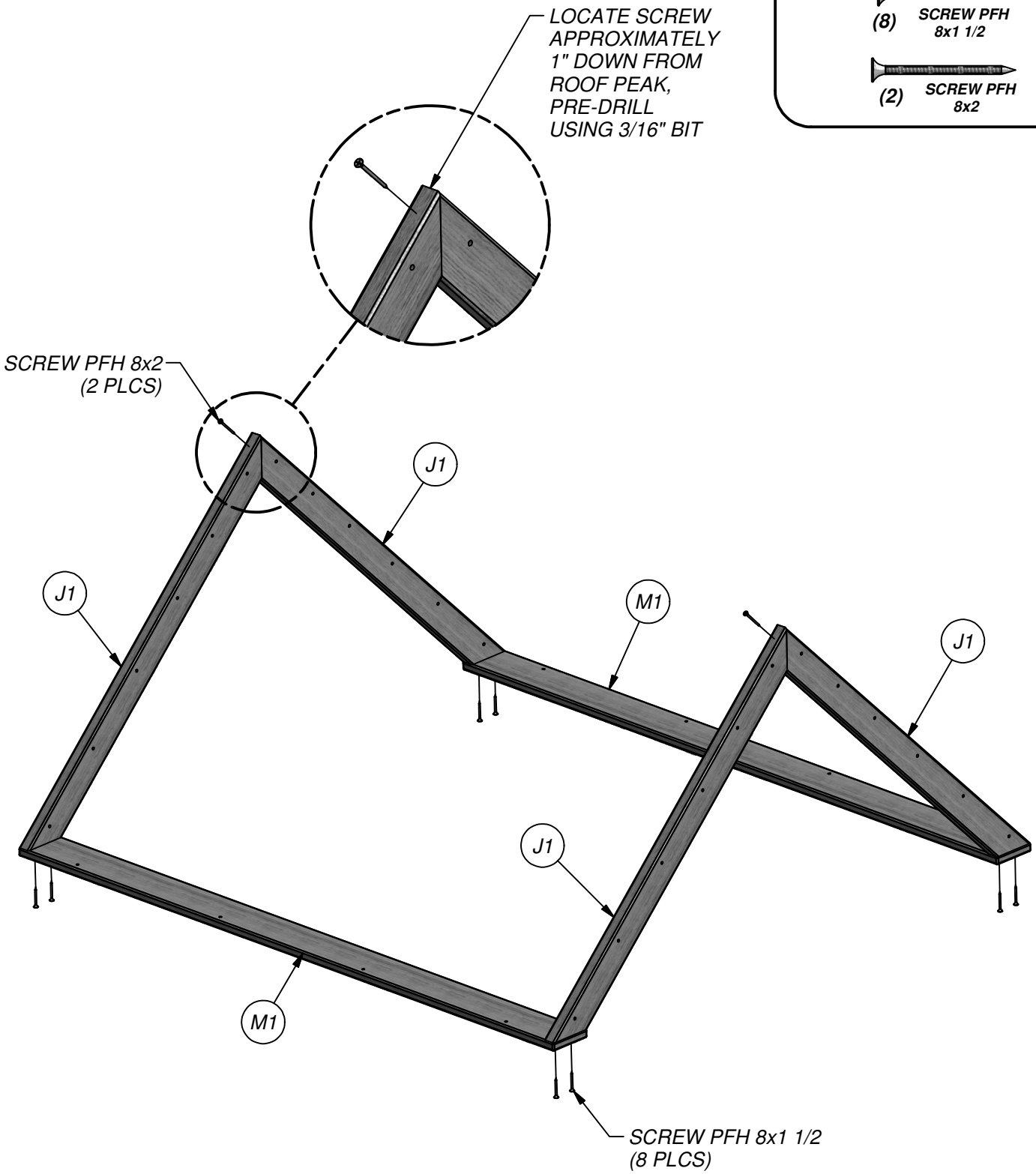

ROOF BASE ASSEMBLY

STEP 28

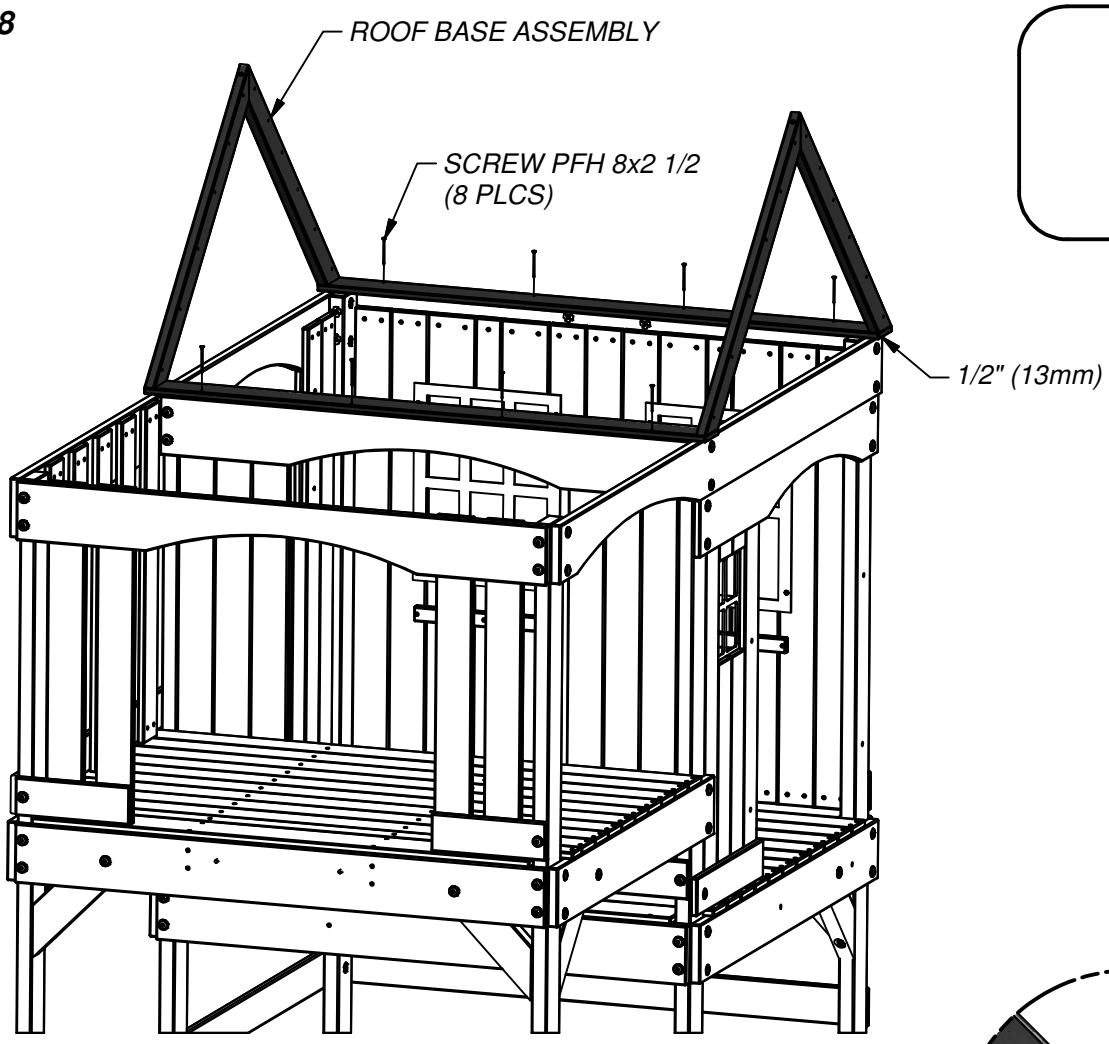

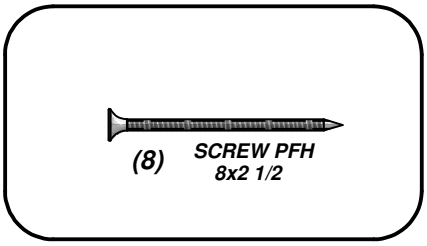

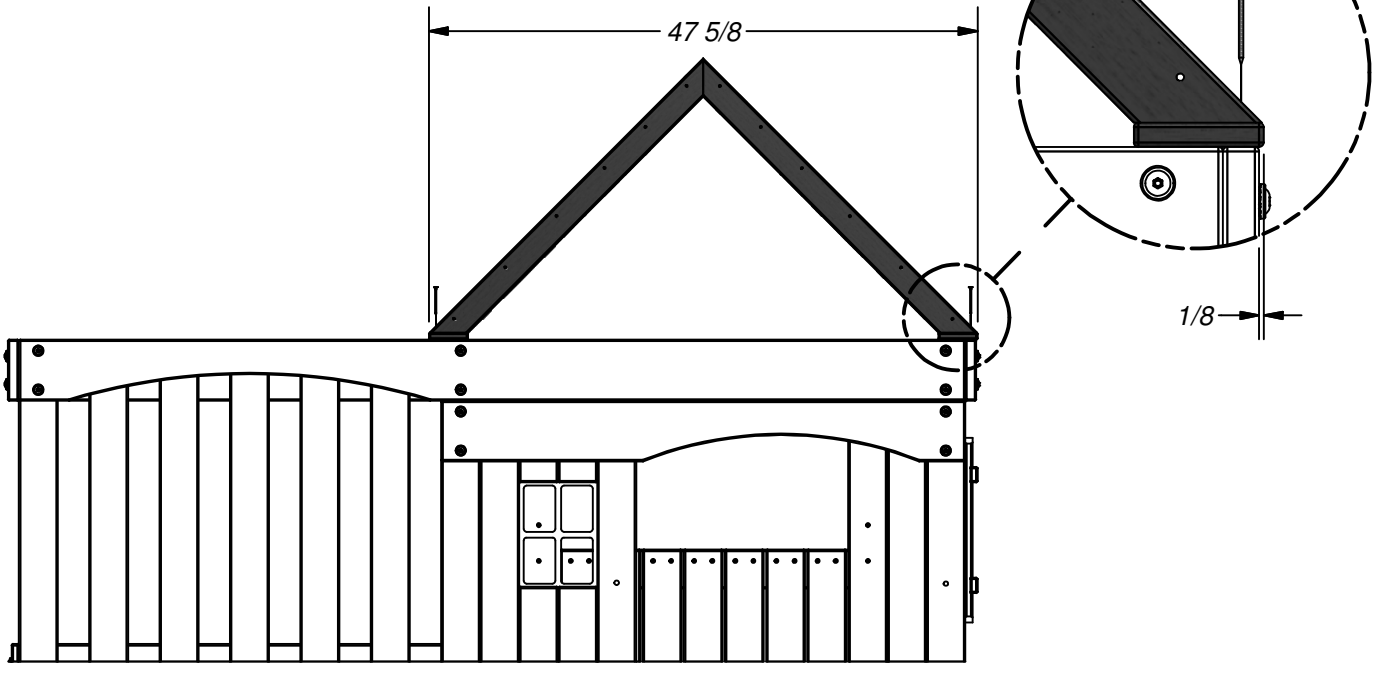

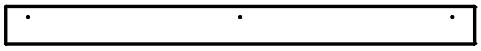

(2) ***M7 - WALL CAP - W100649***
5/8"x3 3/8"x40 7/8" (16x86x1038)

STEP 29

(6) ***SCREW PFH***
8x2 1/2

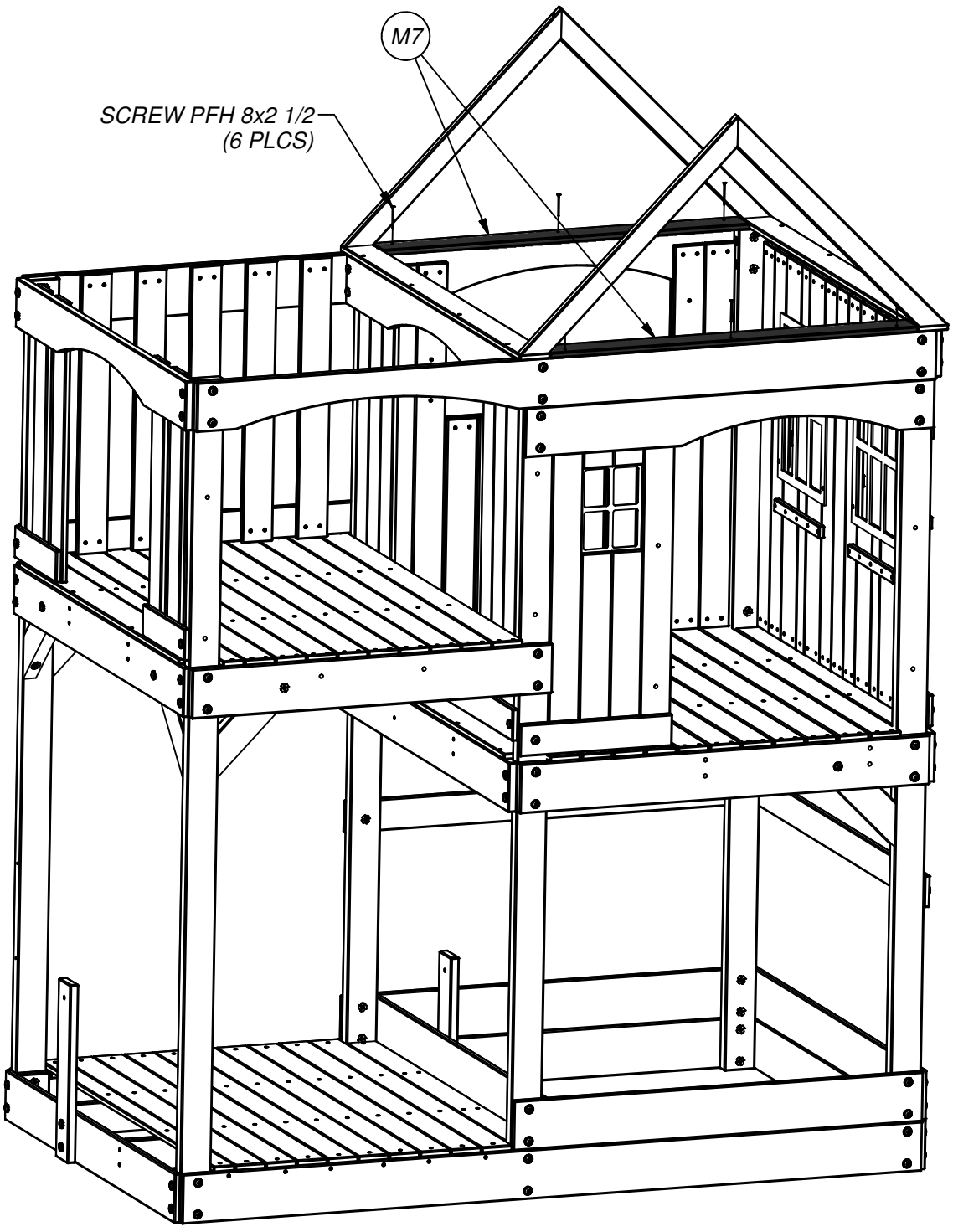

(1) ***M20 - GABLE BOARD - W100662***
5/8"x3 3/8"x12 1/4" (16x86x310)

(2) ***M22 - GABLE BOARD - W100664***
5/8"x3 3/8"x9 1/2" (16x86x241)

(2) ***M19 - GABLE BOARD - W100661***
5/8"x3 3/8"x15 1/4" (16x86x387)

(1) ***M15 - GABLE BOARD - W100657***
5/8"x3 3/8"x19" (16x86x482)

(2) ***N4 - GABLE BOARD - W100670***
5/8"x2 3/8"x11 7/8" (16x60x301)

(1) ***M4 - GABLE BOARD - W100646***
5/8"x3 3/8"x44" (16x86x1118)

STEP 30

(22) ***SCREW PFH***
8x1 1/8

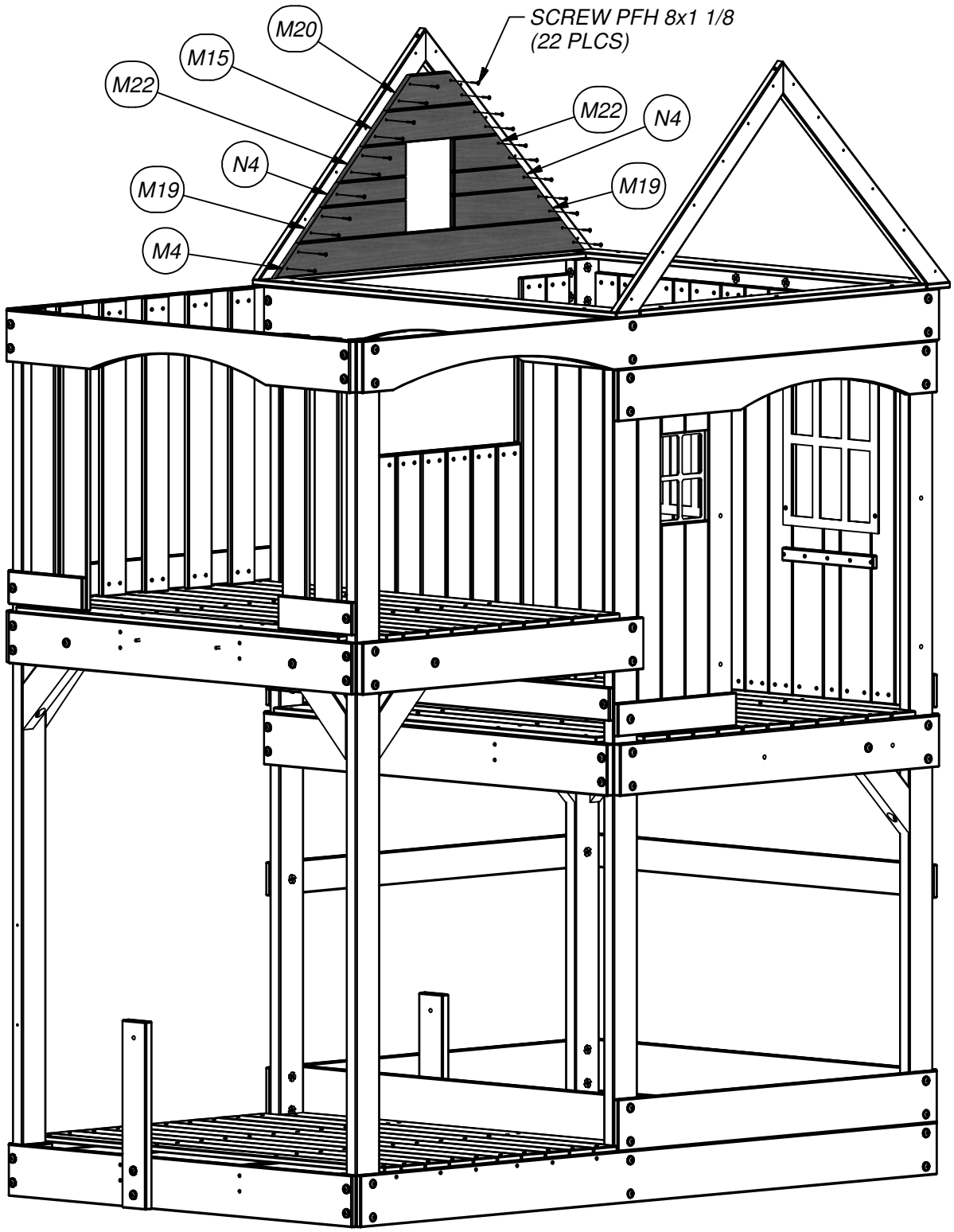

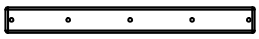

(4) ***O1 - WALL SUPPORT - W100672***
5/8"x1 3/8"x13" (16x34x330)

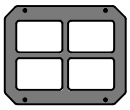

(2) ***GK - WINDOW 216x267 GREEN - A100146***

STEP 31

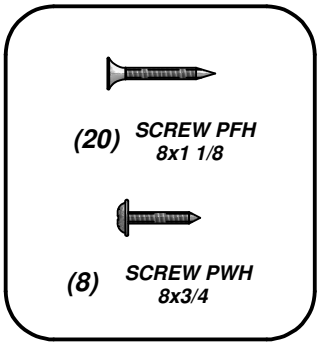

REPEAT STEP 30 AND 31 ON OPPOSITE SIDE.

CENTER WINDOW AND WALL SUPPORTS IN OPENING.
WALL SUPPORTS ARE 1" (25mm) FROM WINDOW.

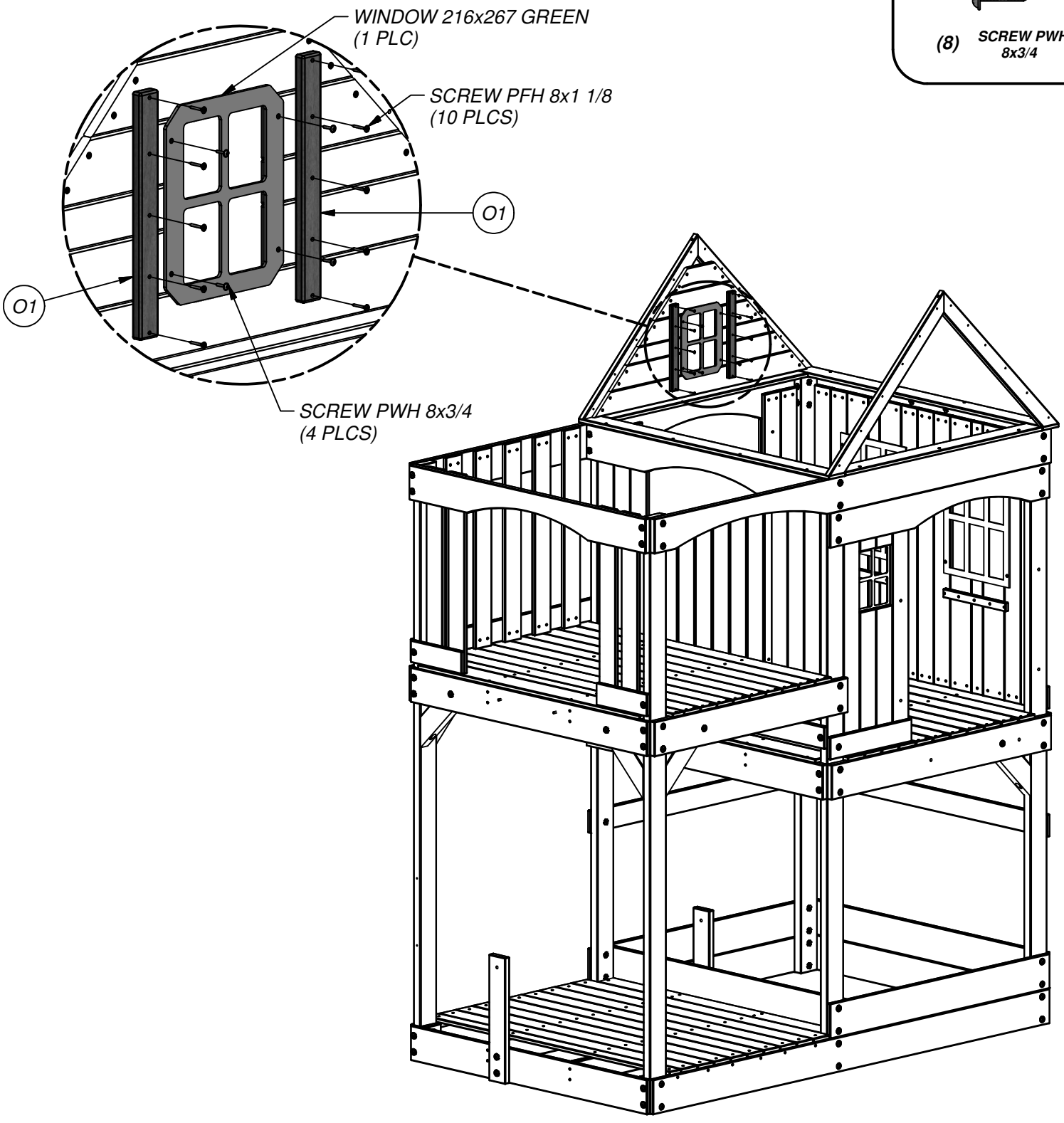

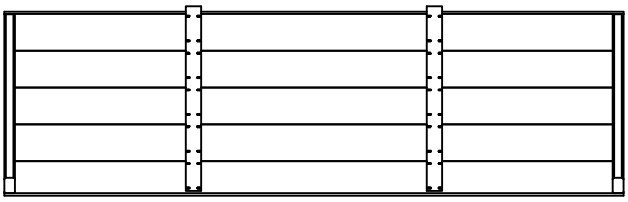

(2) ***RP2 - ROOF PANEL - W2A01678***
1 3/4"x16 1/4"x53 3/4" (45x412x1366)

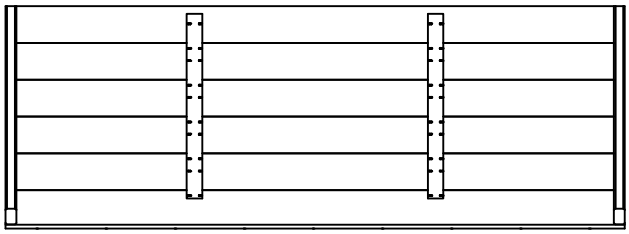

(2) ***RP1 - ROOF PANEL - W2A01677***
1 3/4"x19 1/4"x53 3/4" (45x490x1366)

STEP 32

REPEAT THIS STEP FOR OPPOSITE SIDE.

(24) ***SCREW PFH 8x1 3/4***

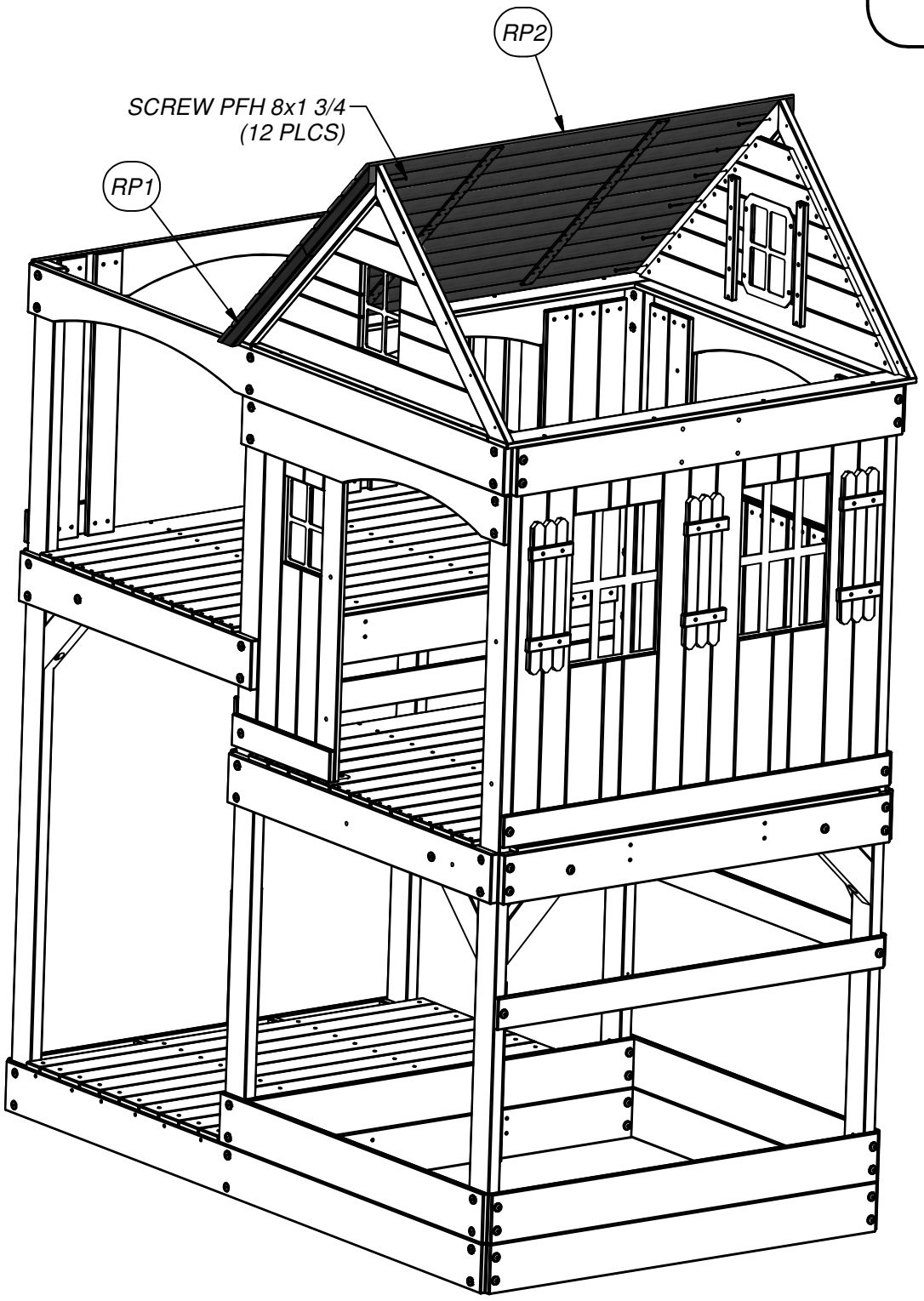

(2) ***N2 - MENDING PLATE - W4L05370***
5/8"x2 3/8"x5" (16x60x126)

STEP 33

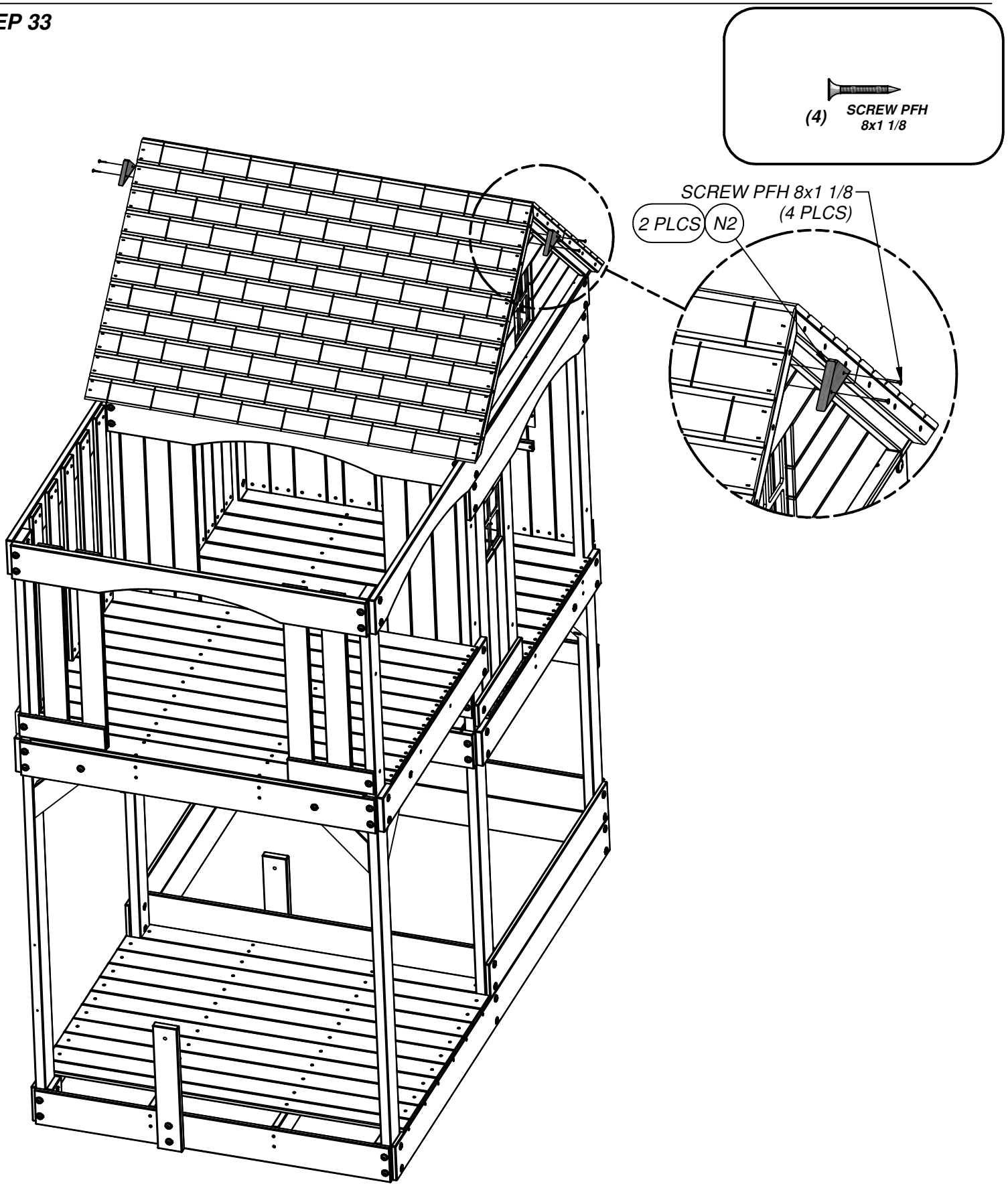

(4) ***FX - HAND GRIP METAL GREEN 381 c/c - A100118***

STEP 34

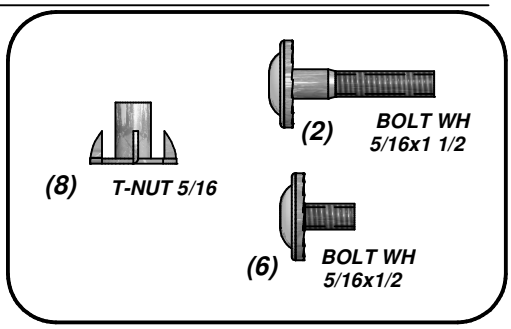

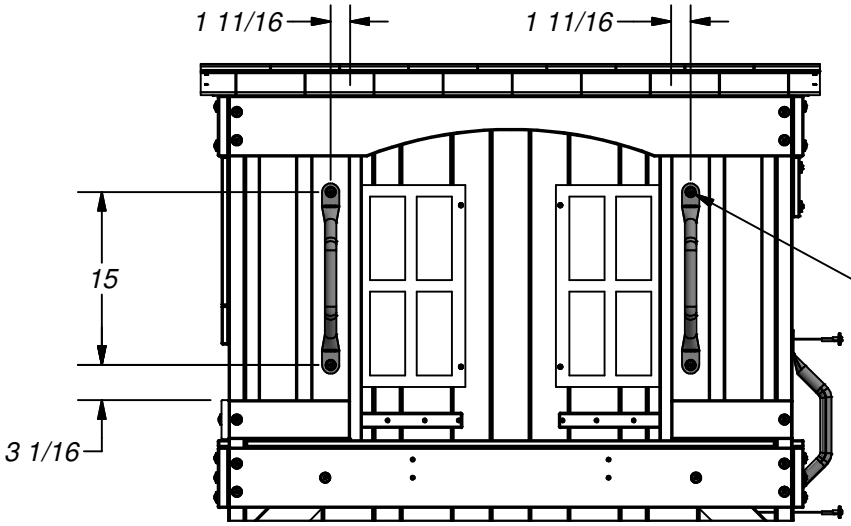

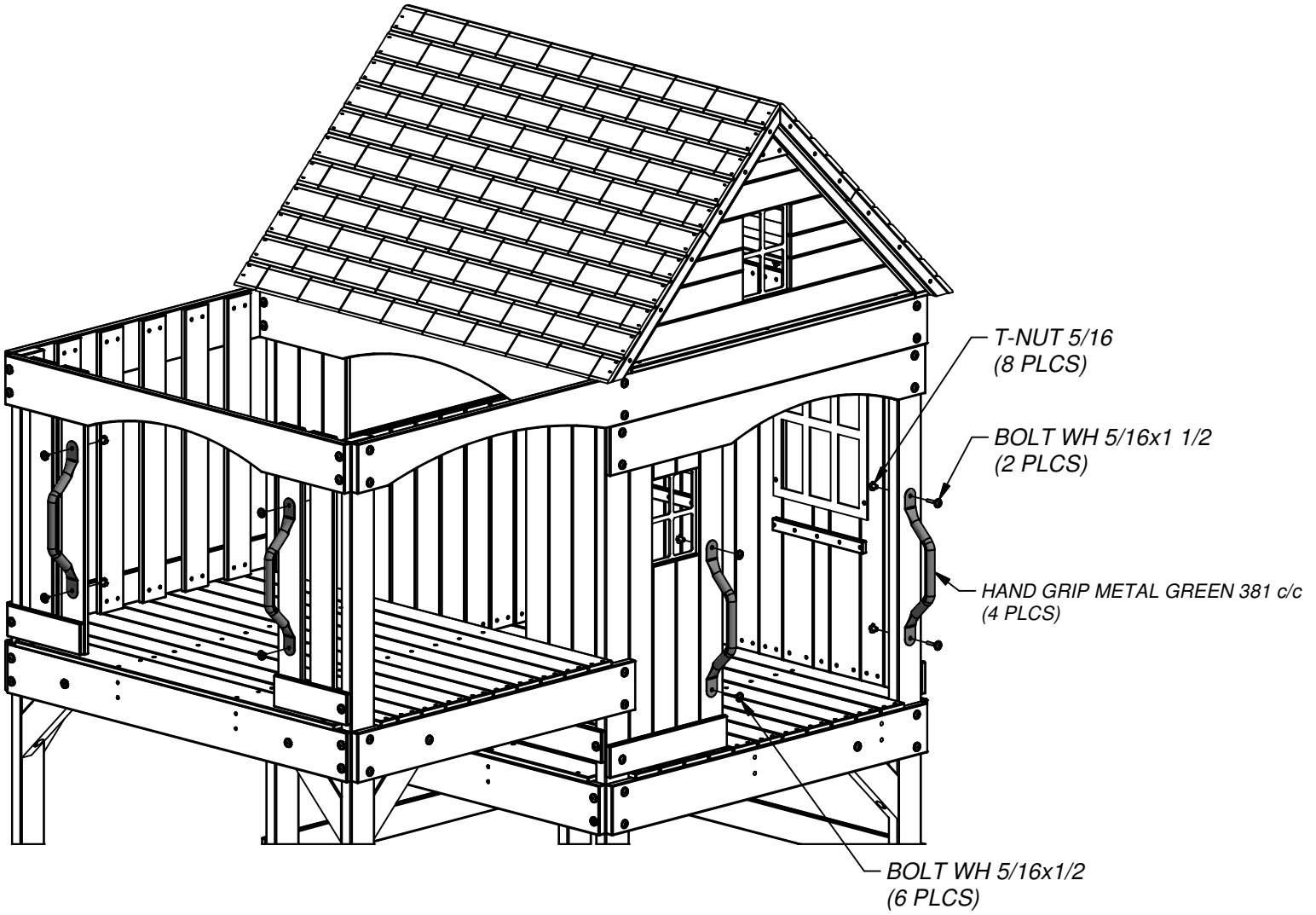

(4) ***T1 - SEAT SUPPORT - W4L05373***
1"x1 3/8"x4 3/8" (24x34x112)

STEP 35

(8) ***SCREW PFH 8x1 1/2***

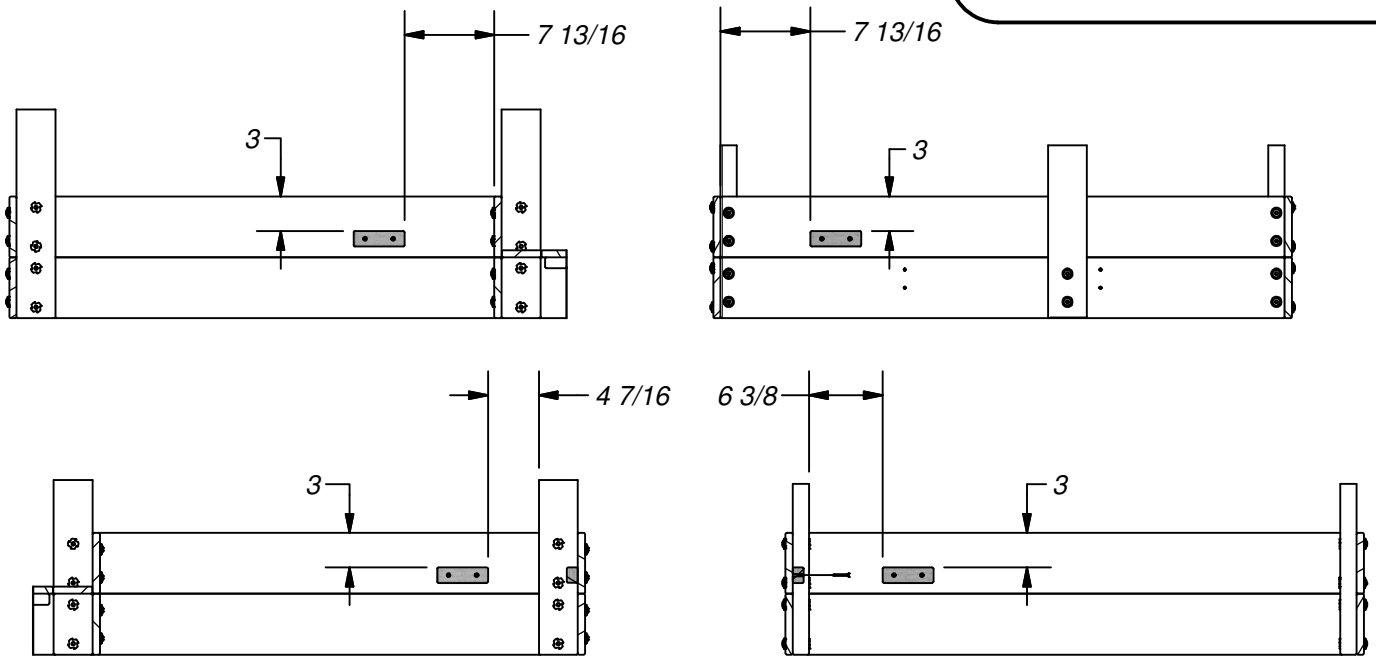

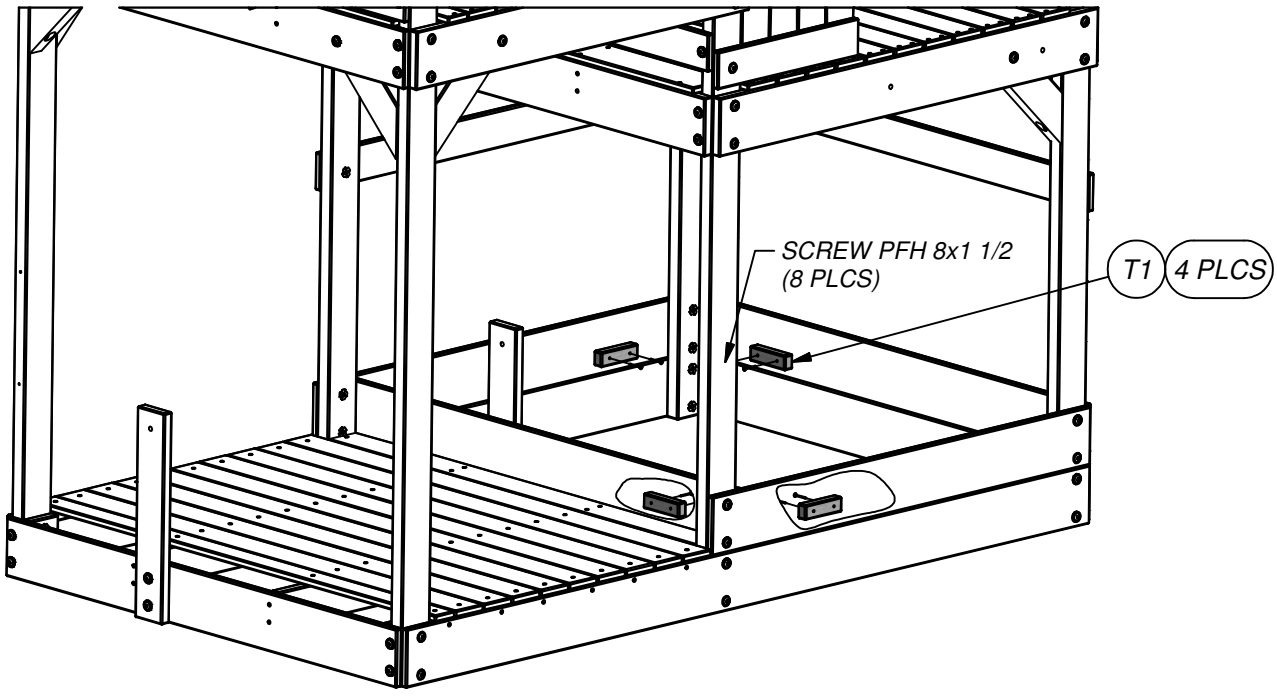

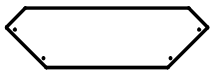

(2) ***G13 - SAND BOX SEAT - W100629***
1"x5 1/4"x17 3/4" (24x134x450)

STEP 36

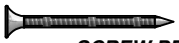

(8) ***SCREW PFH***
8x1 3/4

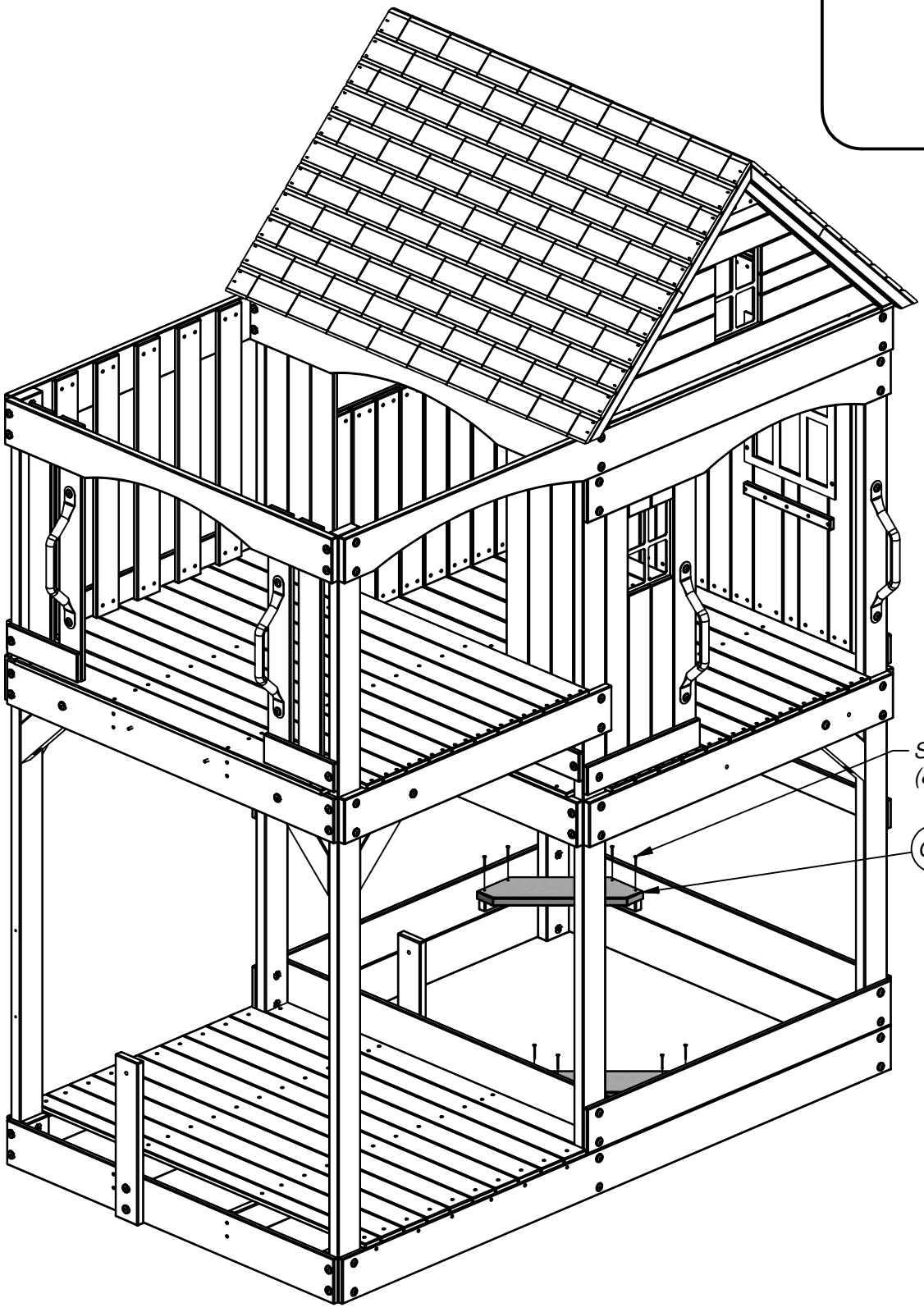

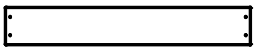

(6) ***M27 - BOTTOM WALL BOARD - W4L04580***
5/8"x3 3/8"x21 3/8" (16x86x544)

STEP 37

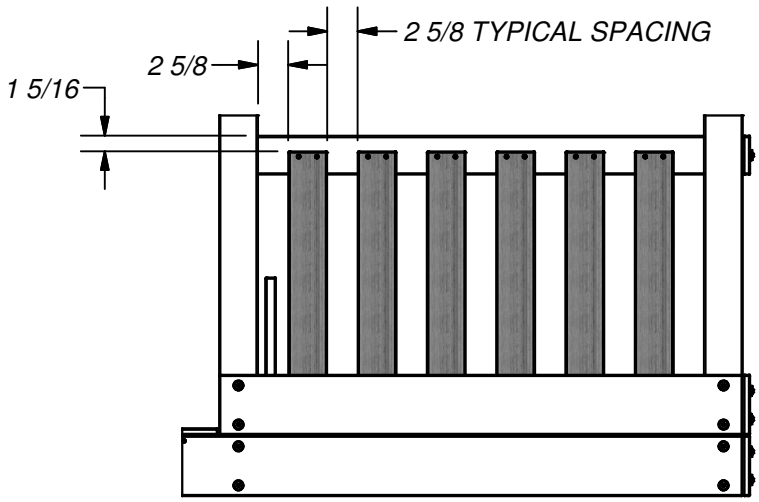

(24) ***SCREW PFH***
8x1 1/8

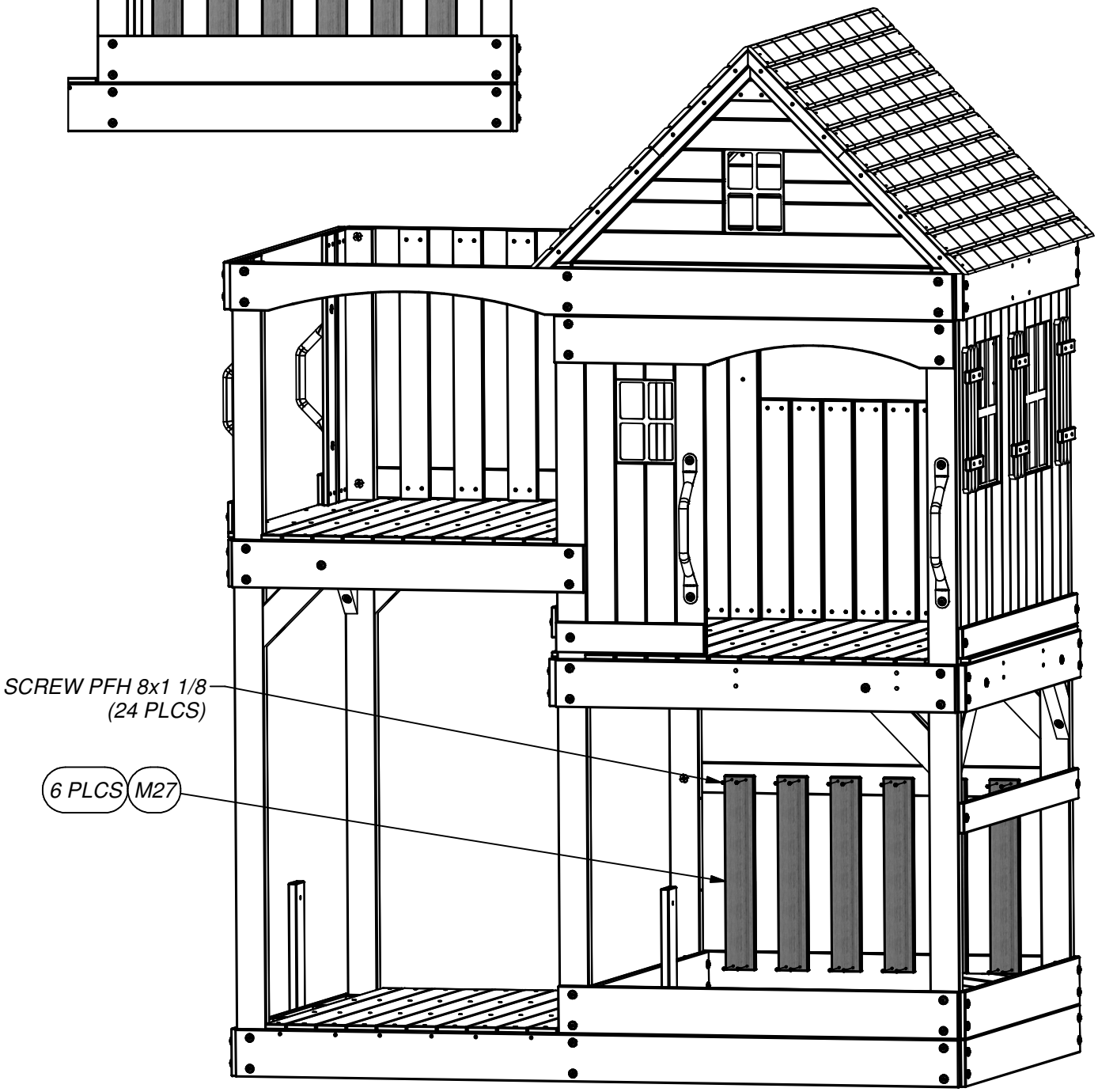

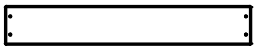

(7) ***M27 - BOTTOM WALL BOARD - W4L04580***
5/8"x3 3/8"x21 3/8" (16x86x544)

STEP 38

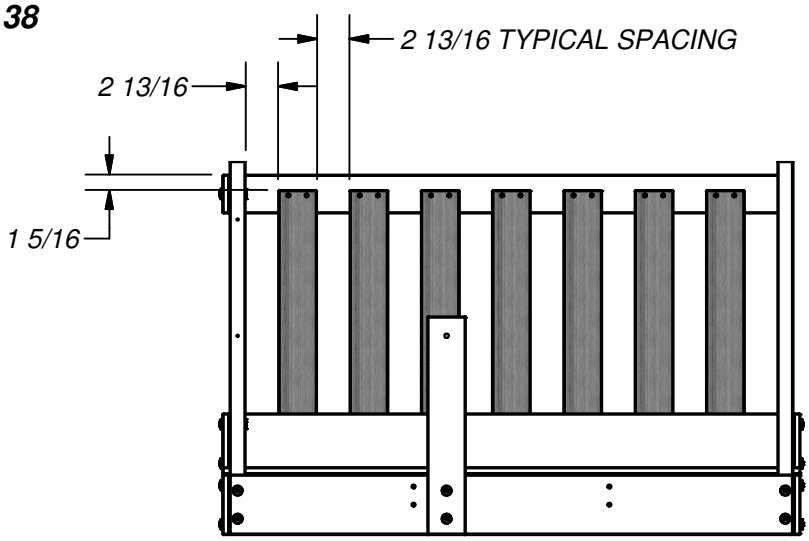

(28) ***SCREW PFH 8x1 1/8***

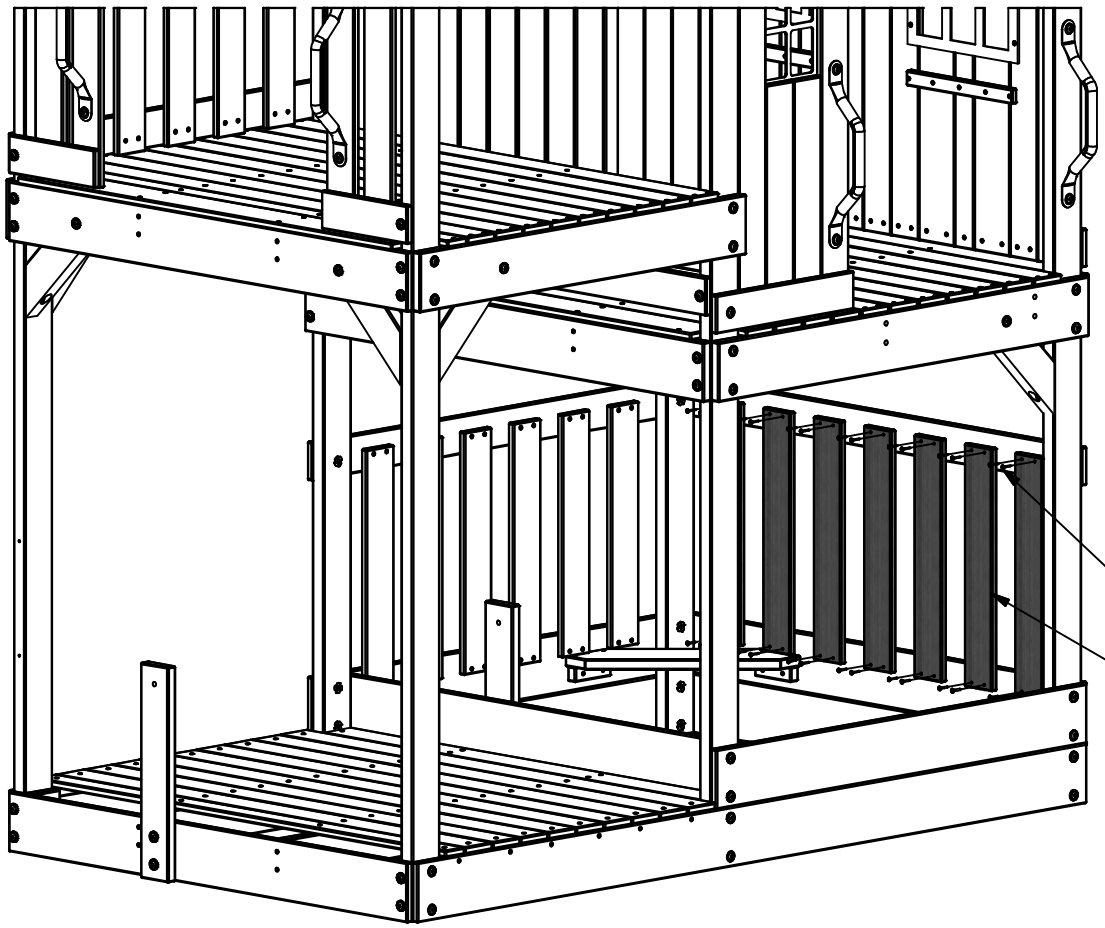

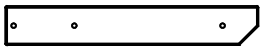

(2) ***M14 - PICNIC SEAT SUPPORT - W4L05371***
5/8"x3 3/8"x22" (16x86x558)

STEP 39

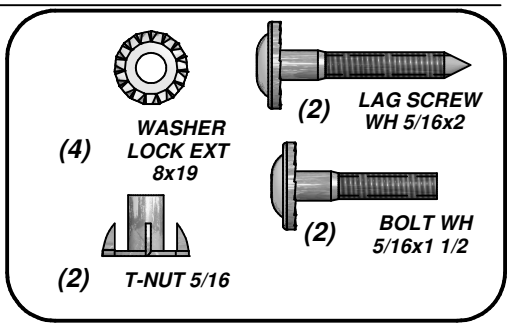

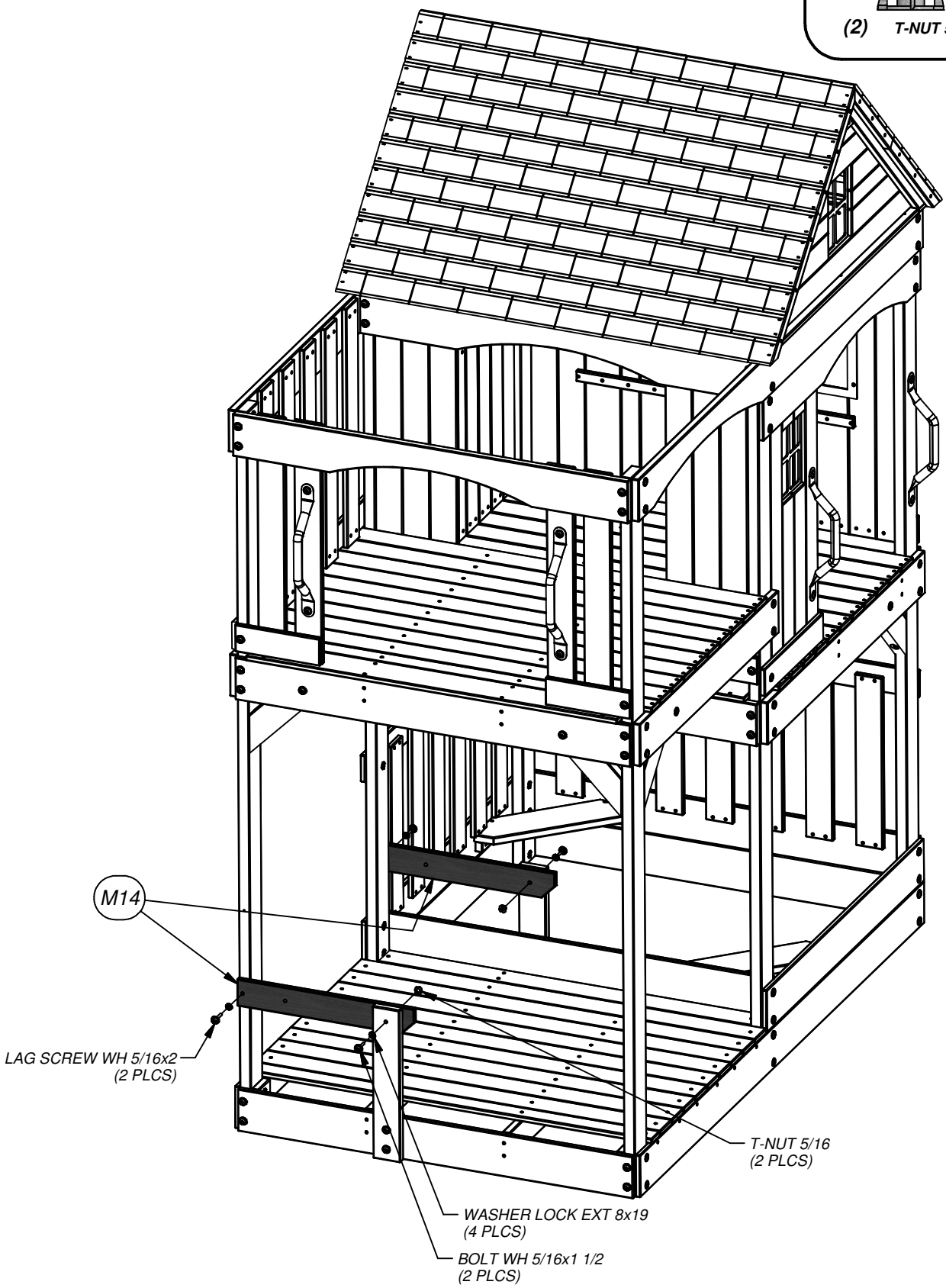

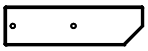

(2) **H8 - TABLE SUPPORT - W100637**
1"x3 3/8"x12" (24x86x306)

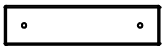

(2) **K4 - TABLE SUPPORT - W4L05407**
5/8"x3 3/8"x13 1/2" (16x86x342)

STEP 40

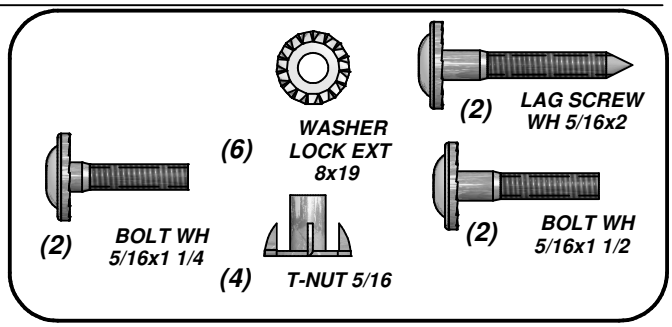

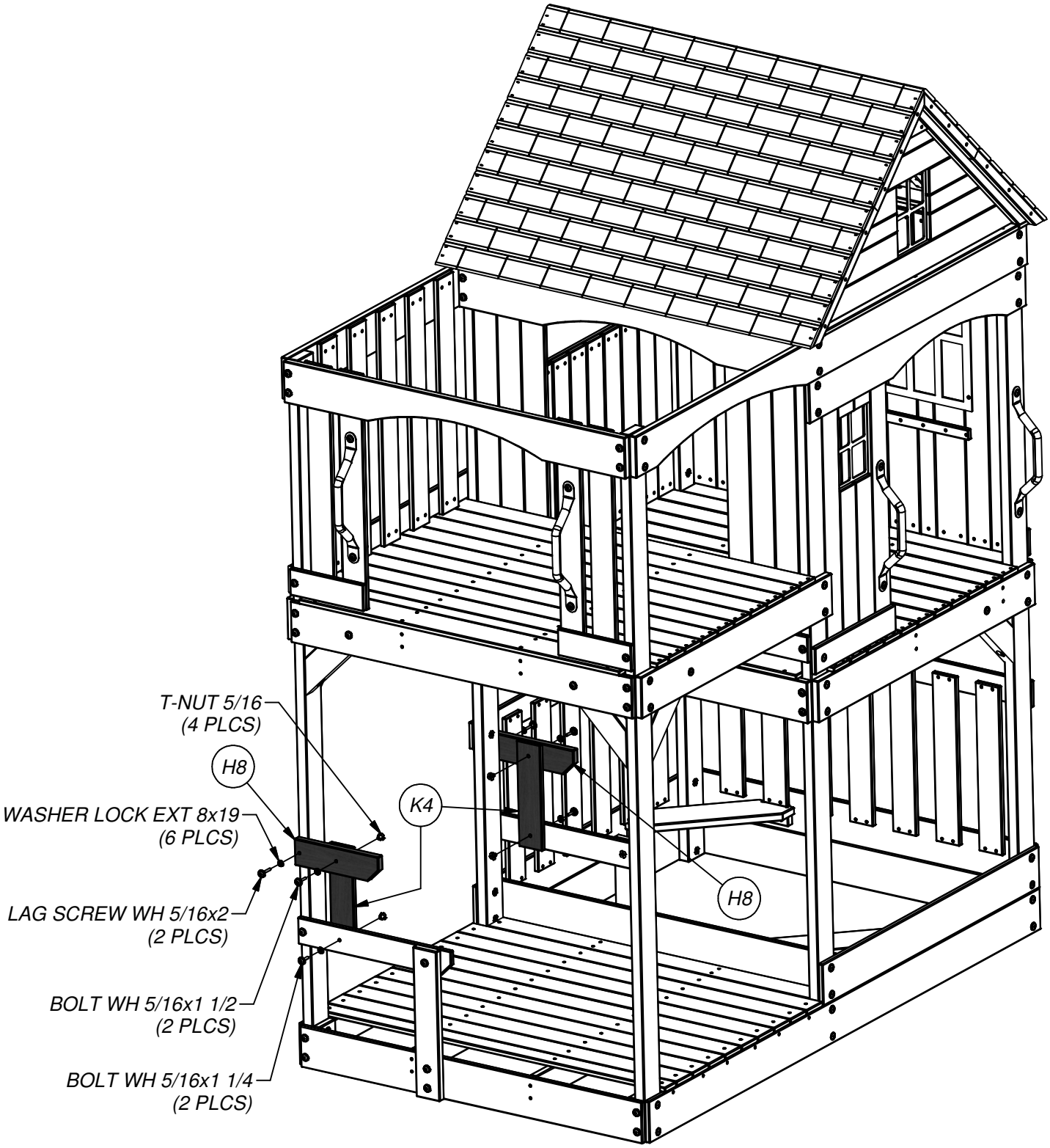

(1) **O3 - SAFETY RAIL - W4L05395**
5/8"x1 3/8"x20 1/2" (16x34x520)

STEP 41

(1) **SCREW PFH 8x1 1/8**

(1) **SCREW PFH 8x1 3/4**

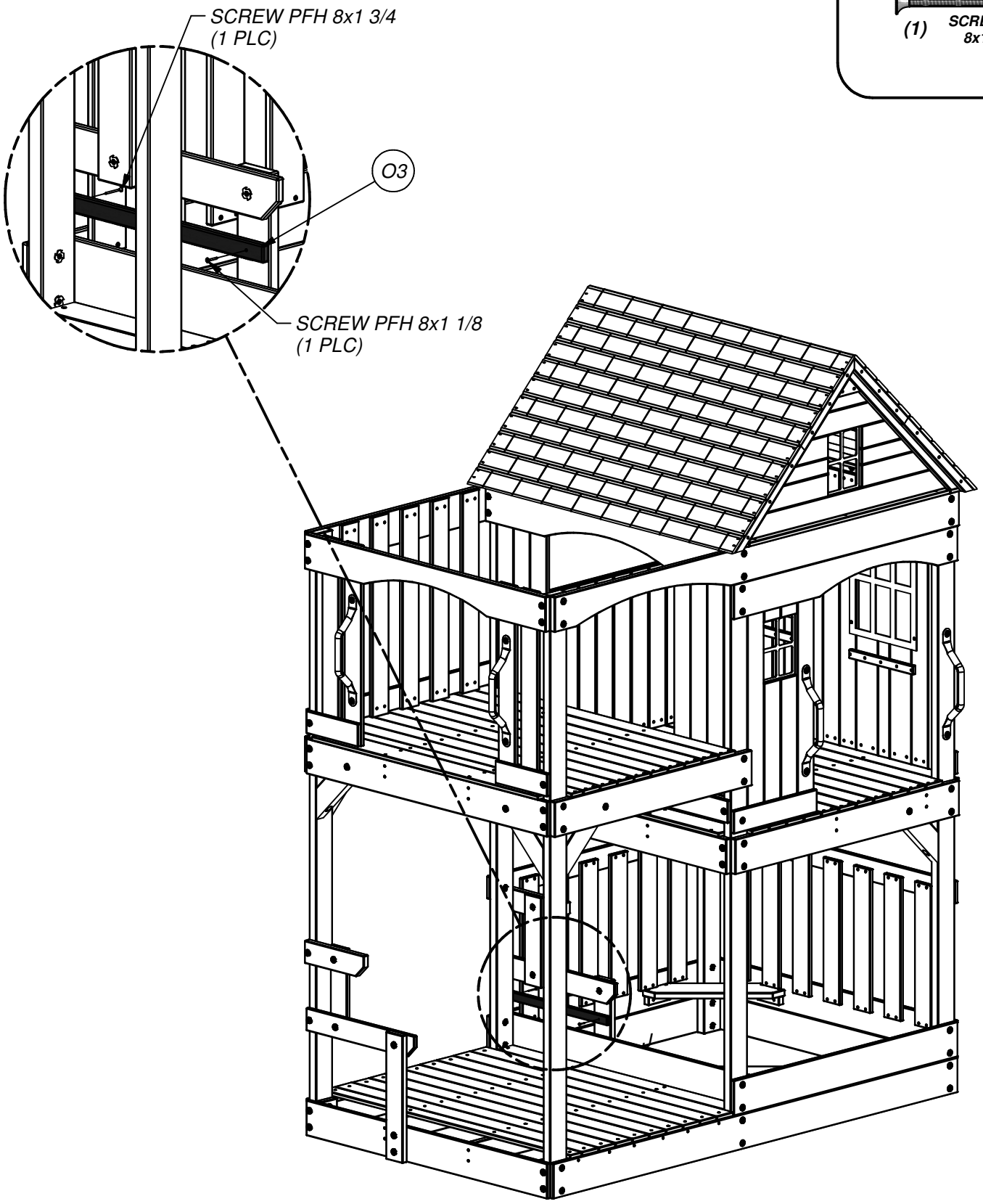

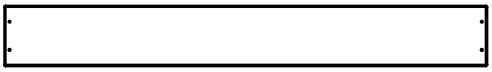

(2) ***G11 - PICNIC TABLE TOP - W4L05408***
5/8"x5 1/4"x42" (16x134x1066)

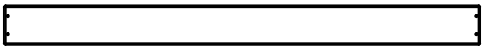

(2) ***H2 - PICNIC TABLE SEAT - W4L05409***
1"x3 3/8"x41 3/8" (24x86x1050)

STEP 42

(16) ***SCREW PFH***
8x1 3/4

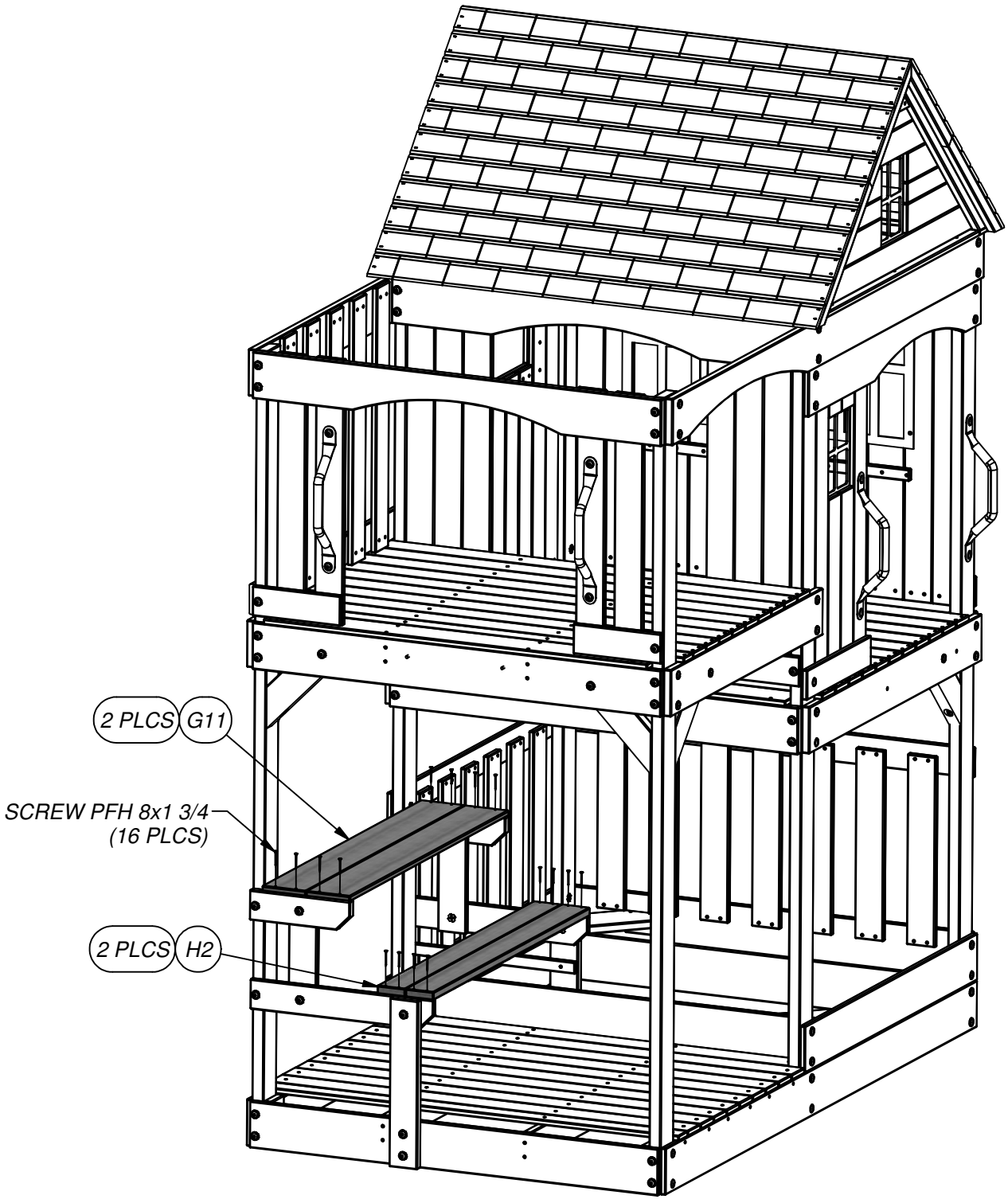

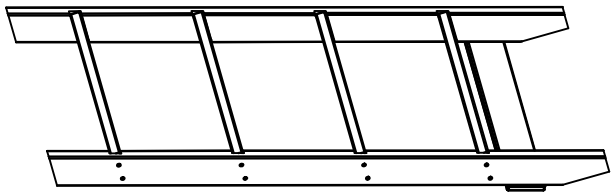

(1) ***LADDER ASSEMBLY***

STEP 43

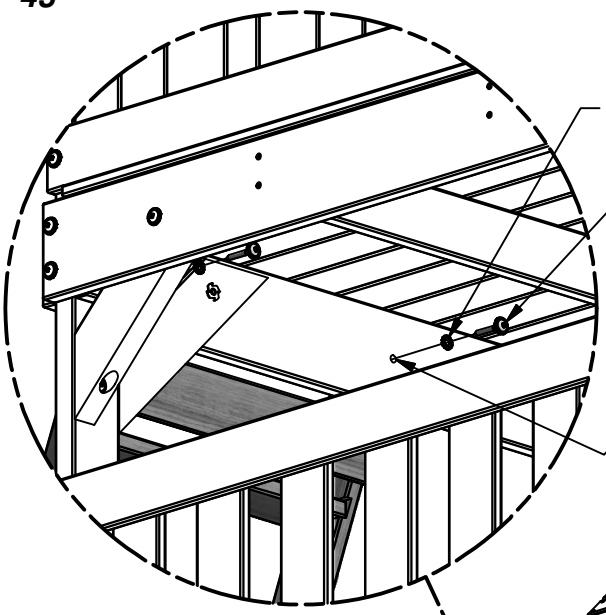

WASHER LOCK EXT 8x19 (2 PLCS)

LAG SCREW WH 5/16x2 (2 PLCS)

PRE-DRILL 3/16" HOLES IN LADDER ASSEMBLY

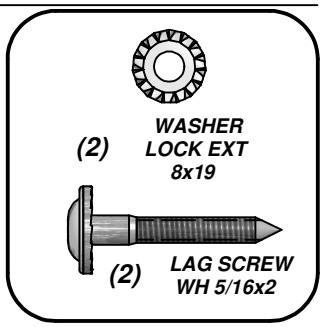

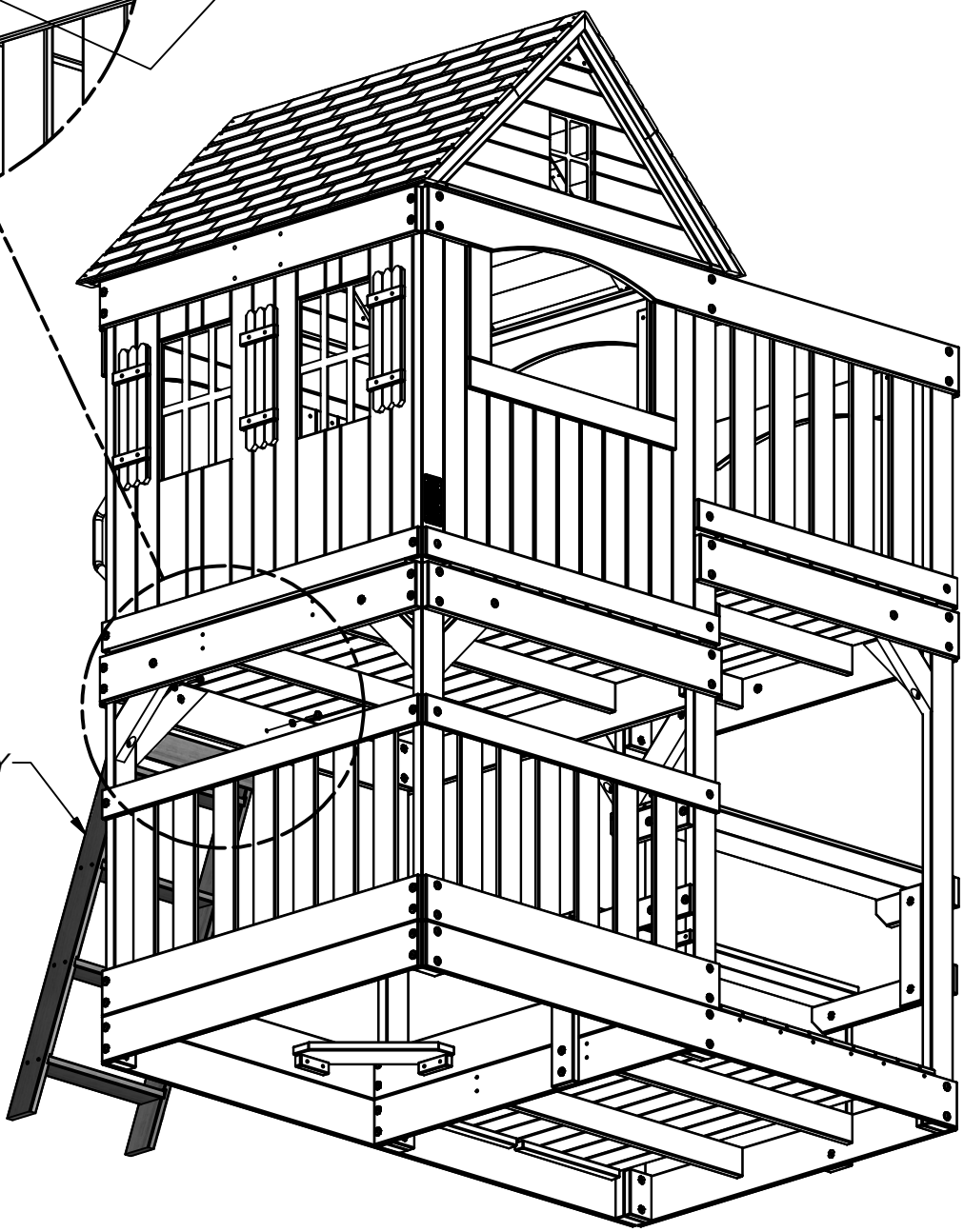

LADDER ASSEMBLY

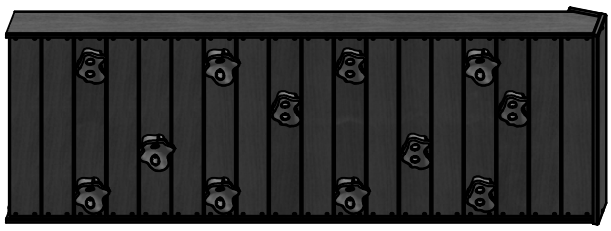

(1) ***ROCKWALL ASSEMBLY***

STEP 44

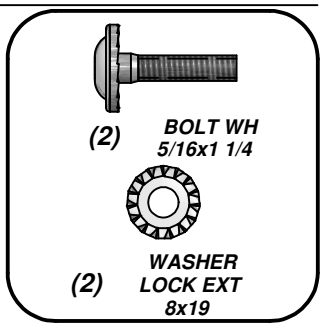

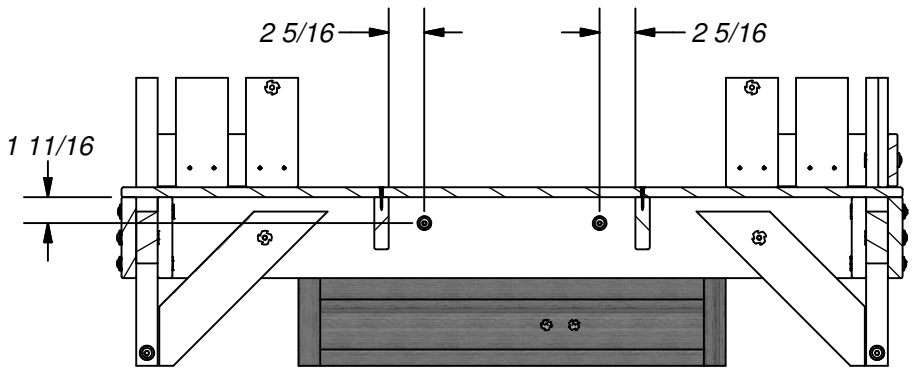

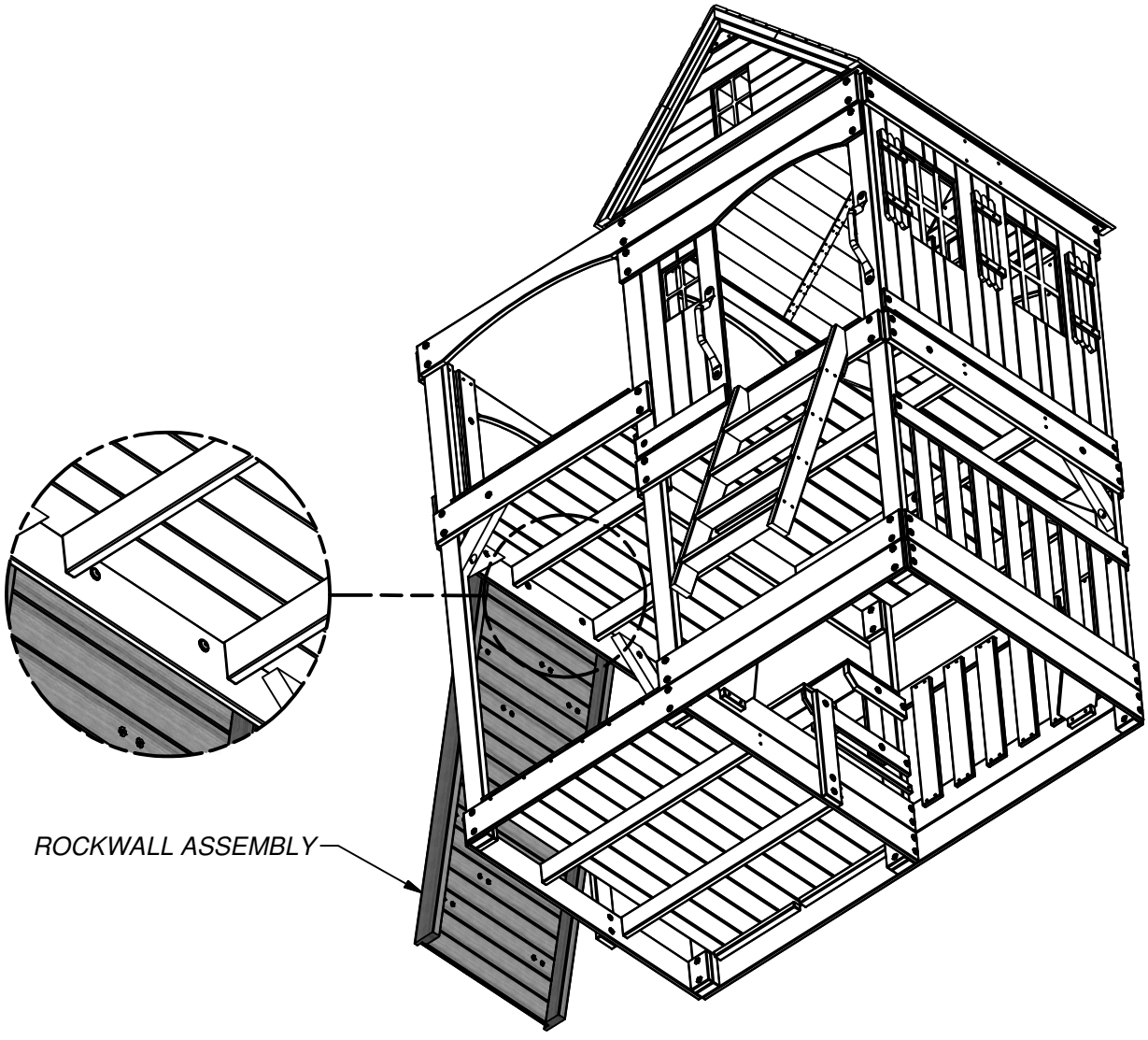

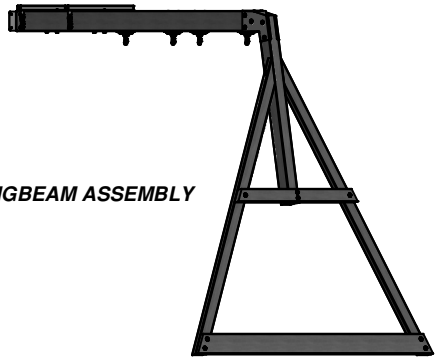

(1) ***SWINGBEAM ASSEMBLY***

STEP 45

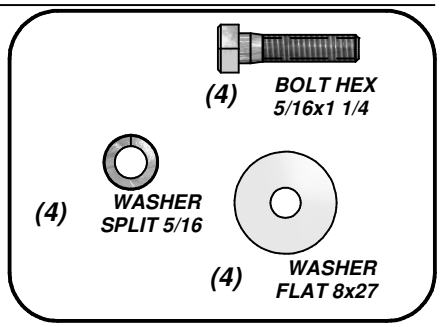

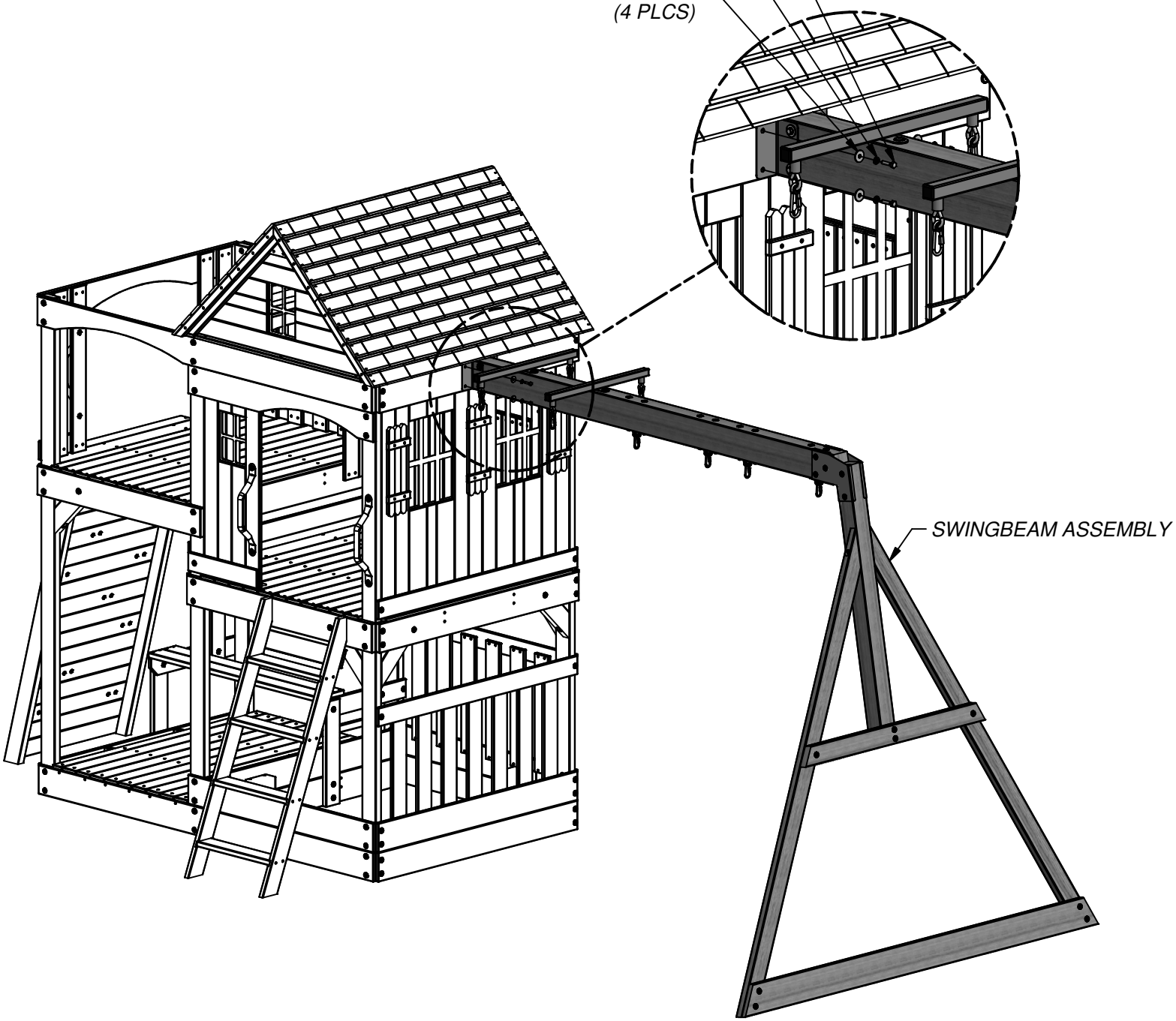

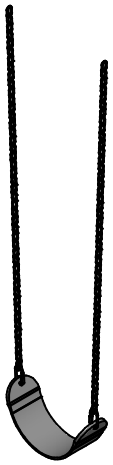

(2) ***SWING ASSEMBLY***

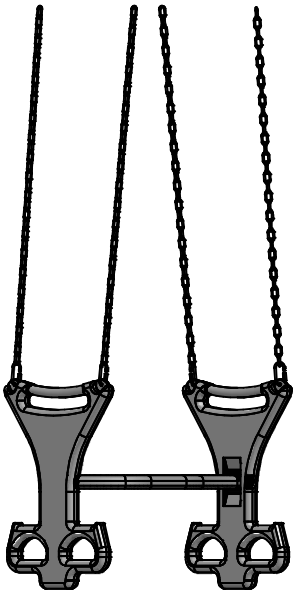

(1) ***GLIDER ASSEMBLY***

STEP 46

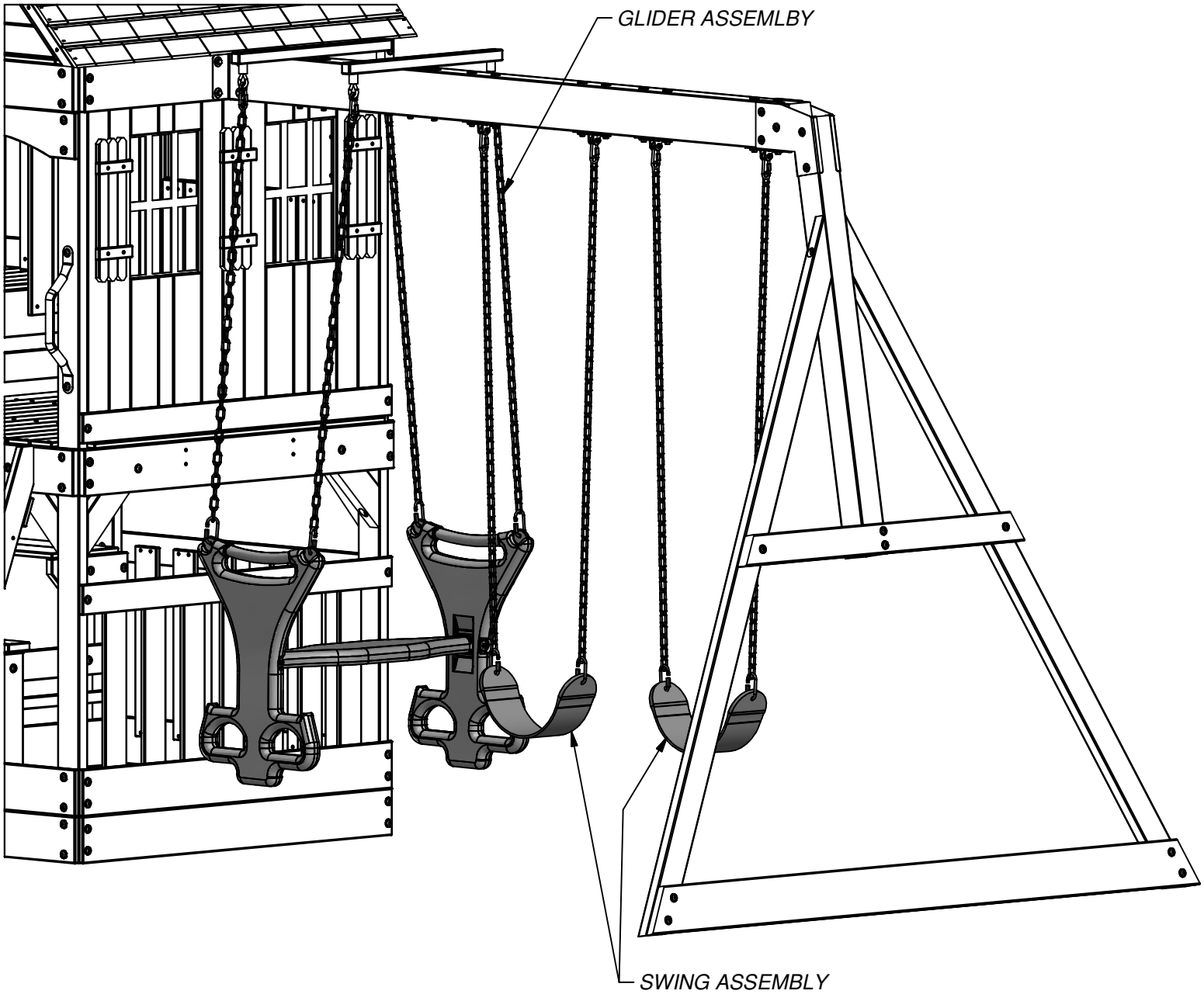

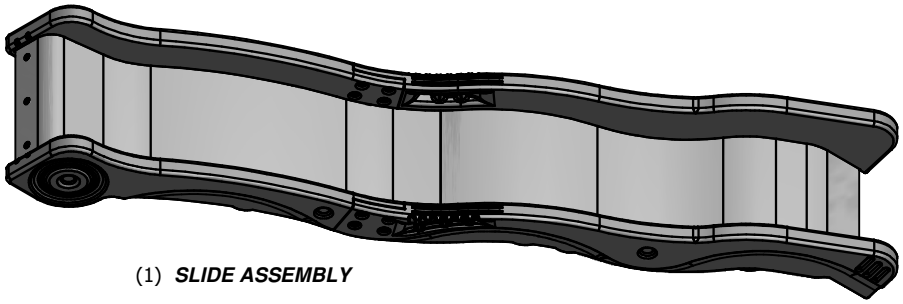

(1) ***SLIDE ASSEMBLY***

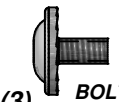

(3) ***BOLT WH 5/16x1/2***

(3) ***T-NUT 5/16***

STEP 47

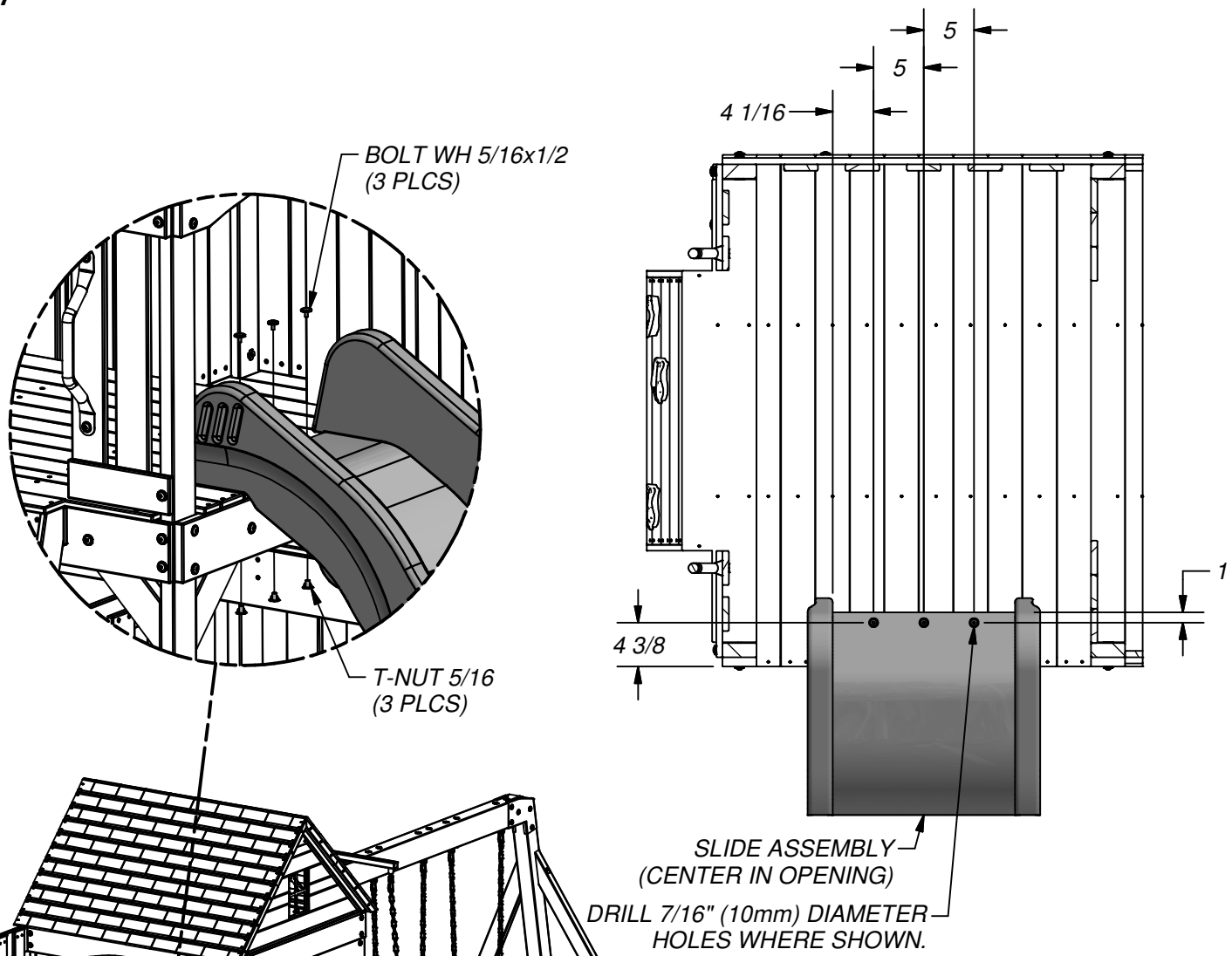

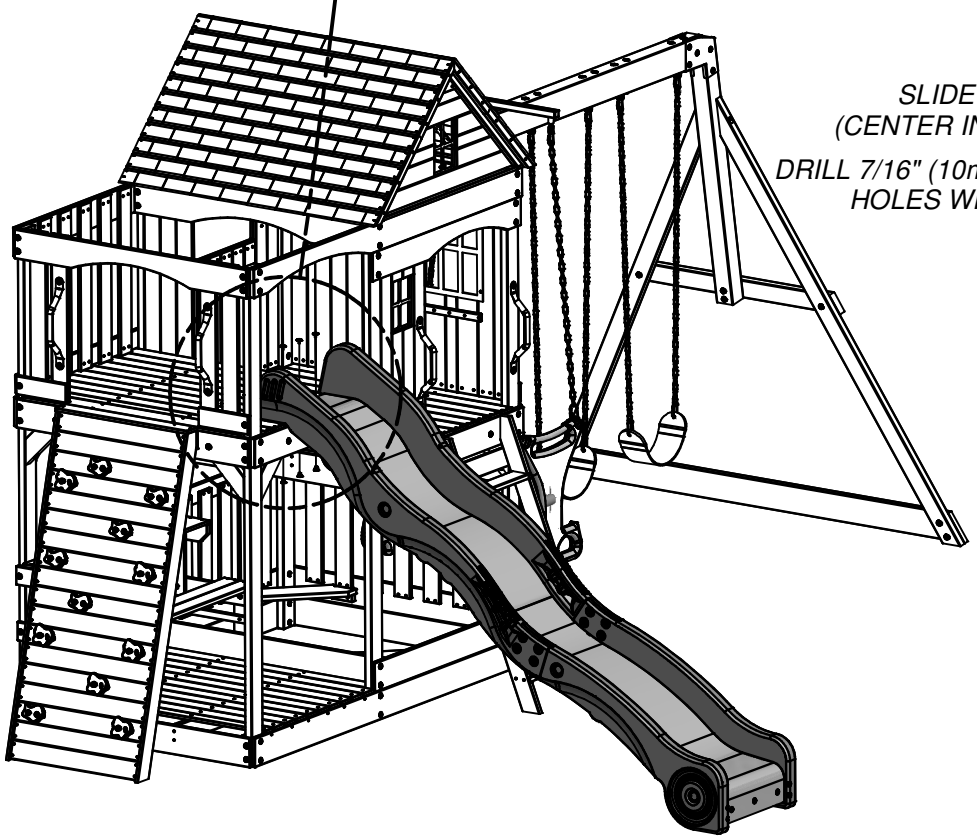

(6) ***- GROUND STAKE REBAR - A4M00527***

STEP 48

DRILL 7/16" (10mm) DIAMETER HOLES APPROXIMATELY WHERE SHOWN.

NOTE:

FAILURE TO USE GROUND STAKES CAN VOID WARRANTY AND CAUSE INJURY!

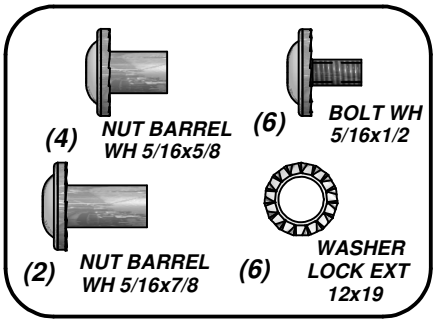

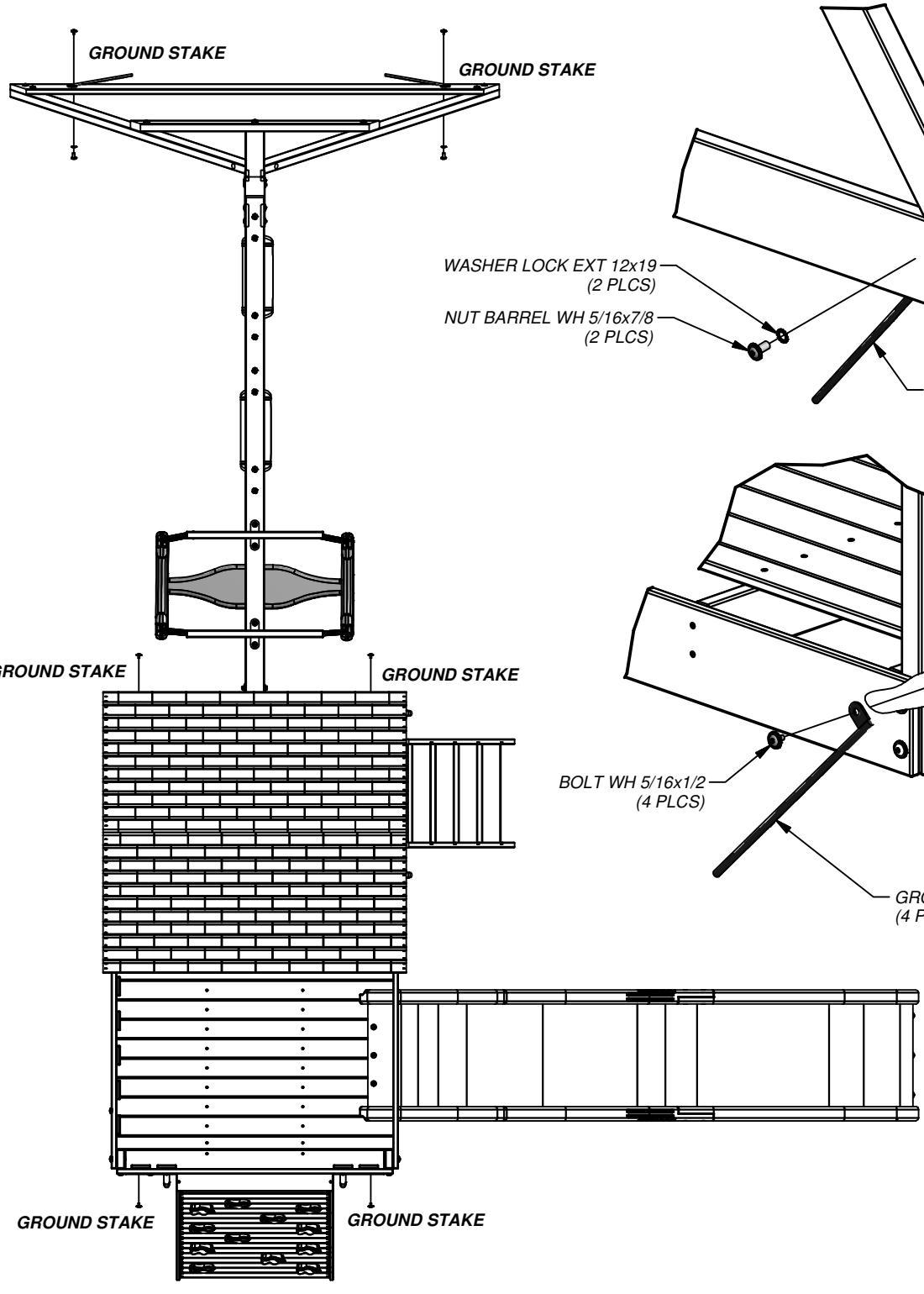

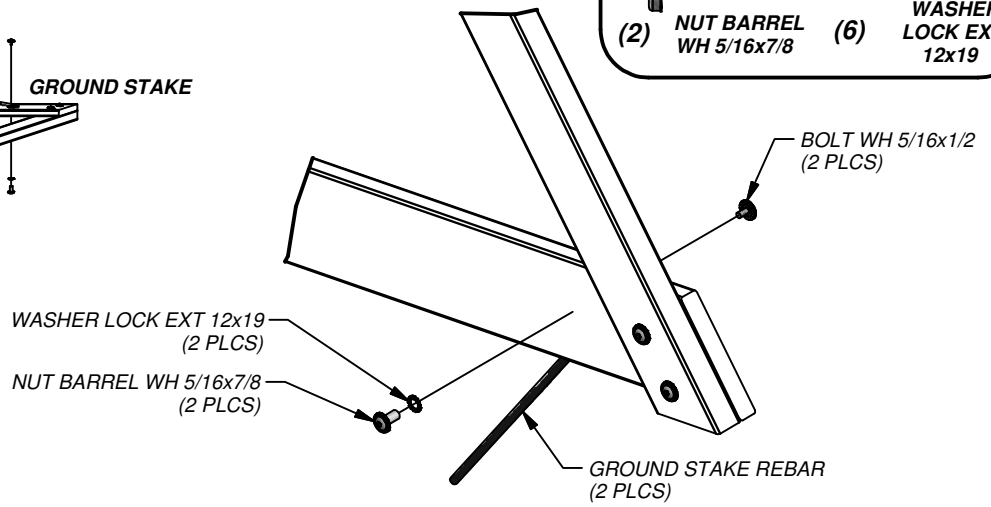

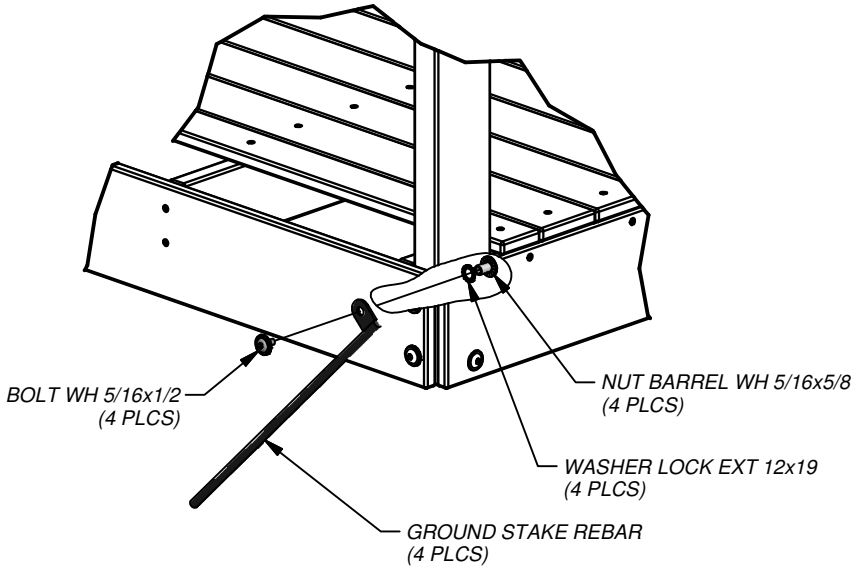

(1) ***Y1 - OUTSIDE FILLER FLOOR BOARD - W4L05752***
5/8"x4"x46" (16x102x1168)

STEP 49

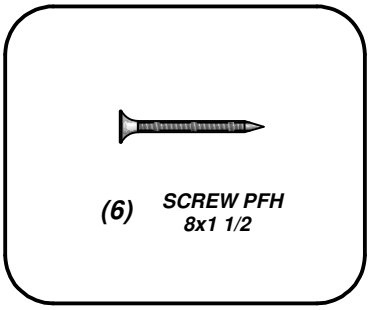

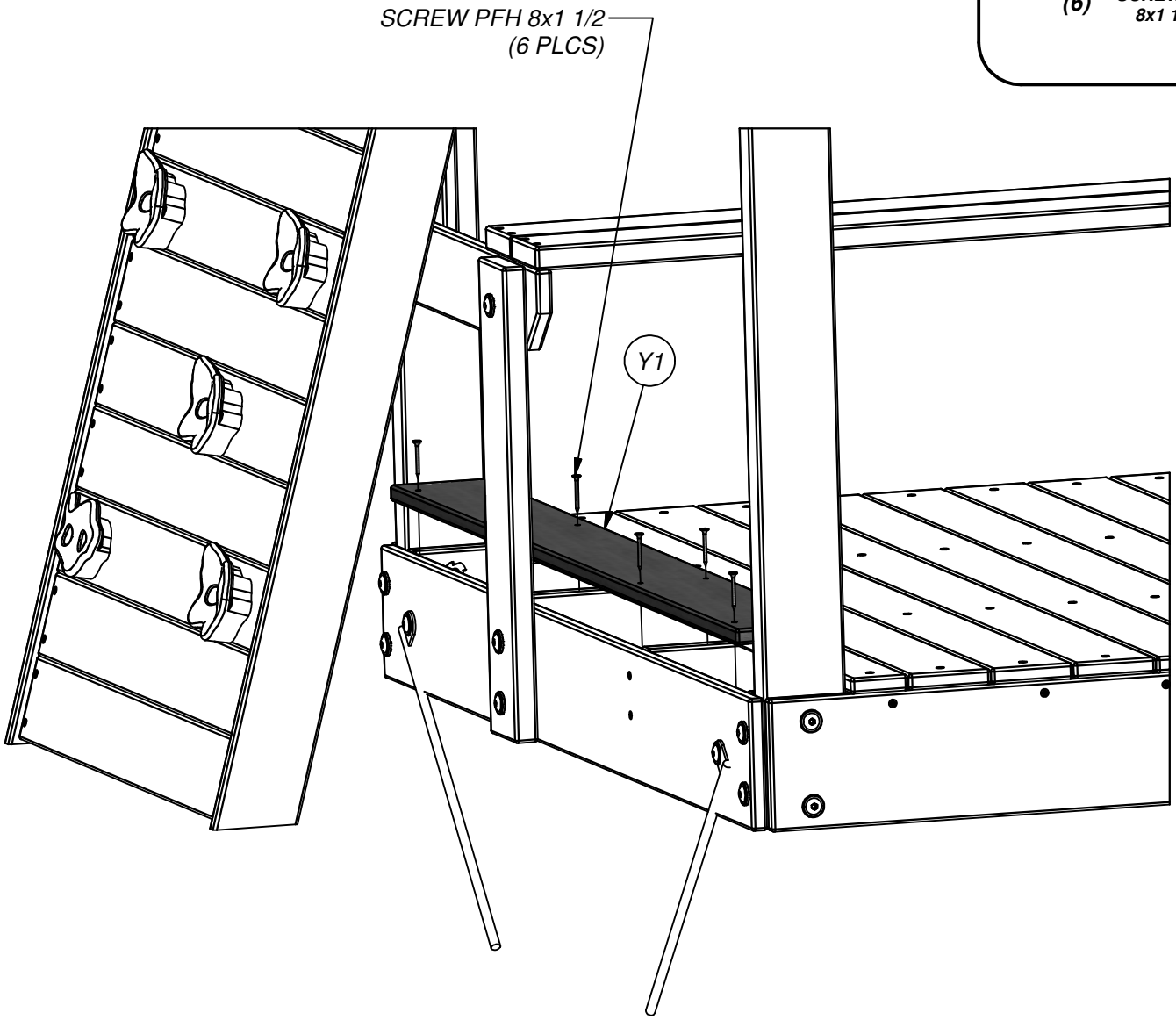

FINAL STEP

DOUBLE CHECK EVERY BOLT, SCREW AND NUT FOR TIGHTNESS. MAKE SURE EVERY BOARD IS SECURE AND MAKE SURE THE PLAY SET IS LEVEL.

ENJOY YOUR NEW PLAY SET!

Limited Warranty

This Limited Warranty by Backyard Discovery applies to products manufactured under the Backyard Discovery brand or its other brands including but not limited to Backyard Botanical, Adventure Playsets, and Leisure Time Products.

Backyard Discovery warrants that this product is free from defect in materials and workmanship for a period of one (1) year from the original date of purchase. This one (1) year warranty covers all parts including wood, hardware, and accessories. All wood carries a five (5) year pro-rated warranty against rot and decay. Refer to the schedule below for charges associated with replacement of parts under this Limited Warranty. In addition, Backyard Discovery will replace any parts within the first 30 days from date of purchase found to be missing from or damaged in the original packaging.

This warranty applies to the original owner and registrant and is ***non-transferable****. Regular maintenance is required to assure maximum life and performance of this product and failure by the owner to maintain the product according to the maintenance requirements may void this warranty. Maintenance guidelines are provided in the Owner's Manual.*

This Limited Warranty does not cover:

- *Labor for any inspection*
- *Labor for replacement of any defective item(s)*
- *Incidental or consequential damages*
- *Cosmetic defects which do not affect performance or integrity of a part or the entire product*
- *Vandalism, improper use, failure due to loading or use beyond the capacities stated in the applicable Assembly Manual.*
- *Acts of nature including but not limited to wind, storms, hail, floods, excessive water exposure*
- *Improper installation including but not limited to installation on uneven, unlevel, or soft ground*
- *Minor twisting, warping, checking, or any other natural occurring properties of wood that do not affect performance or integrity*

Backyard Discovery products have been designed for safety and quality. Any modifications made to the original product could damage the structural integrity of the unit leading to failure and possible injury. Modification voids any and all warranties and Backyard Discovery assumes no liability for any modified products or consequences resulting from failure of a modified product.

This product is warranted for RESIDENTIAL USE ONLY. Under no circumstance should a Backyard Discovery product be used in public settings. Such use may lead to product failure and potential injury. Any and all public use will void this warranty. Backyard Discovery disclaims all other representations and warranties of any kind, express or implied.

This Warranty gives you specific legal rights. You may have other rights as well which vary from state to state or province to province. This warranty excludes all consequential damages, however, some states do not allow the limitation or exclusion of consequential damages and therefore this limitation may not apply to you.

Pro Rated Part Replacement Schedule

Product Age	*Customer Pays*
All Parts	
0-30 days from date of purchase	*$0 and free shipping*
31 days to 1 year	*$0 + S&H*
Wood Rot and Decay Only	
1 year	*$0 and free shipping*
2 years	*20% + S&H*
3 years	*40% + S&H*
4 years	*60% + S&H*
5 years	*80% + S&H*
Over 5 years	*100% + S&H*